Replacement Parts List No. 700018600
Revision H 01/2015

Air-Cooled Scroll Compressor Chiller Unit Revision 00 and 0A (Code 55)

AGZ
025 - 190
Vintage D
R410A

To find your Daikin Applied parts distributor, call 1-800-377-2787 or visit www.DaikinApplied.com

Contents

Parts List Revision History 3
Serial Number Nomenclature 4
Unit Model Nomenclature Complete ..... 5 - 7
Electrical Legend ..... 8 - 9
Unit Controls
- Control Box Layout Diagrams 10
- Control Box Component Label Diagram 11
- Control Box Common Components ..... 12 - 13
- Compressor Contactors: M1- 6 & Compressor Circuit Breakers: CB1- 6 ..... 14 - 15
- Fan Contactors: M11- 27, Fan Motor Protectors: MSP1- 14, & Fan Line Reactors: LR1- 3 16
- Disconnects: DS1, 2 17
- Pump Package Circuit Breaker: CB7 18
- Fuses: FU4- FU8, FU16 19

Refrigeration Circuit
- Compressor Layout Diagrams ..... 20 - 21
- Compressors
  - AGZ 025- 040 22
  - AGZ 045- 065 23
  - AGZ 070- 080 ..... 24 - 25
  - AGZ 090- 100 ..... 26 - 27
  - AGZ 110- 130 ..... 28 - 29
  - AGZ 140- 160 ..... 30 - 31
  - AGZ 180- 190 32
- Compressor Trio Piping AGZ 110- 190 33
- AGZ 025- 130 Evaporator ..... 34 - 35
- AGZ 140- 190 Evaporator 36
- Liquid Line Piping ..... 37 - 40
- Discharge Line Piping ..... 41 - 43
- Suction Line Piping ..... 44 - 46
- Hot Gas Bypass Piping ..... 47 - 48
- Sensor & Solenoid Valve Location ..... 49 - 51
- Miscellaneous Components 52

Condenser Section
- Fan Motor and Fan Deck ..... 53 - 54
- Condenser Coils 54

Cabinet Components ..... 55 - 58
Coil & Base Guards ..... 59 - 69
Hail Guard / Wind Baffle 69
Optional Equipment
- Alarm Bell Kit, HGBP Kit, VFD Kit, Water Flow Indicator, ... 70
- Evaporator Strainer, High Ambient Kit, & Pump Package Components 70

Pump Package Control Box ..... 71 - 80
Crtical Parts List CPL1

Parts List Revision History

Revision	Date	Description
New	12/10	New.
A	12/10	Page 23: Changed Suction dwg. Bub. #s from C111, C112, C113 to C130, C131, C132. Added Bub. #s C125 & C126 to Oil Equalization dwg.
B	1/11	Page 26: Changed Evap p/ns for size 180 from 331738903 to 331750302 & 331738913 to 331750312. Changed Evap p/ns for size 190 from 331738903 to 331750303 & 331738913 to 331750313. Page CPL1, CPL2: Updated format to conform to revised standards.
C	7/11	Various: Corrected misc. spelling errors. Page 2: Changed “Controls” Section to “Unit Controls”. Page 3: Added a new page for additional “Contents”. Repaginated document and updated TOC. Page 8, 9 (Old) 9, 10 (New): Added Pump Package schematic designators to Electrical Legend. Pages 62- 71 (New): Added new pages for Pump Package Control Box Components & Diagrams. Repaginated document and updated TOC.
D	9/12	Cover, Rev. pg, Master CPL pg: Updated to Daikin McQuay logo format. Various: Changed “McQuay Parts” to “Daikin McQuay Parts”. Pages 6- 8: Updated Nomenclature codes to Rev. 8/3/2012. Page 23, CPL1, 2: Converted tandem cmprs. to single p/ns. Updated footnotes. Page 25, 27: Changed Flow Sensor from 330571401 to 331796201. Page 42, CPL2: Changed Disch. Transducer from 331764601 to 331764611 & Suct. Transducer from 331764501 to 331764511. Page 46: Changed Ref.# W07 from 331764601 to 330515401. Page 50: Changed Grill- Coil from 331774901 to 330802401 & Louver- Coil from 331774903 to 330455001. Page 61: Added Flow Sensor 331796201 & Flow Sensor Cable 330571403 to Flow Switch table. Changed header “Flow Switch” to “Water Flow Indicator”. Updated TOC. Changed Evap Strainer 331776617 to 331758902, 331776618 to 331758903 & 331776619 to 331758908.
E	12/12	Page 11: Added Headers to Switch Box drawings. Page 61: Added High Ambient Kit p/ns 193463701 & 193463702. Added footnote #2.
F	08/13	Cover: Added Unit Revision information. Pages 6, 7: Updated Unit Model Nomenclature. Page 13: Added part numbers for Phase Voltage Monitor on Unit Rev. 0A. Pages 20- 32: Added nine pages to detail Compressor info for Unit Revs. 00 and 0A. Added Crankcase Heater and Motor Protection Module info. Page 33: Removed “cap” from Ref. C126 Sight Glass description. Added Trio Compressor Mounting Rails and Spacers. Page 34: Updated p/n’s for Evaporators with Single Insulation and added p/n’s for Evaporators with Double Insulation. Corrected p/n for Ref. 03 Flow Sensor from 330571401 to 331796201. Page 35: Corrected quantities for Ref. 224 Evaporator Insulation. Page 36: Updated p/n’s for Evaporators with Single Insulation and added p/n’s for Evaporators with Double Insulation. Corrected p/n for Flow Sensor from 330571401 to 331796201. Page 40: Removed “cap” from Ref. L118 Sight Glass description. Page 41: Added drawings for Discharge Line Piping for Unit Rev. 0A. Page 43: Added p/n for Ref. D105 Dischg Shut-Off Valve on Unit Rev. 0A. Page 51: Added p/n’s for Transducer Cable. Added p/n’s for High Pr Switch and Relief Valve on units with Chicago Code. Page 52: Moved Trio Compr Mounting Rails and Spacers to Compr Trio Piping page. Moved Crankcase Heater and Motor Protection Modules to Compressor pages. Added Compr Sound Enclosures for Unit Rev 0A. Corrected p/n’s for Sensor Wells and Evap. Heaters. Page 54: Updated p/n’s for Ref. 901 Motors- 330423402 was 330423401, 330423302 was 330423301, 330293902 was 3302293901, 330423702 was 330423701. Page 65: Corrected p/n for Ref. W58 Louvered Panel from 330868501 to 331868501. Page 68: Corrected p/n for Ref. W58 Louvered Panel from 330868501 to 331868501. Page 70: Added p/n’s for Water Flow Switch on Unit Rev. 0A. CPL1,CPL2: Removed Compressor information. Moved other parts to page1, removed page 2.
G	08/2014	Page 62: Removed Base Grille Kits. These are Base **Louver** Kits. Page 65: Added Base Louver Kits. Page 70: Added VFD Retrofit Kits.
H	01/2015	Page 65: Corrected “Grille” to “Louver”. Page 70: Corrected p/n’s for Fan VFD Kits & Hi Ambient/Exh Fan Kits. Moved Pump Pkg notes. Page 71: Added new page for PVM, GFP, 115V Outlet, Transformers, & Pump Package notes. Page 78: Corrected p/n for T1 Transformer, 400-460/60/3, was 038253974.

Serial Number Nomenclature

STN U 10 05 048200

Plant Identification
STN = Staunton, VA

U = Unit

Year of Manufacture
10 = 2010
11 = 2011
12 = 2012
13 = 2013
14 = 2014
etc.

Month of Manufacture

01 = January	08 = August
02 = February	09 = September
03 = March	10 = October
04 = April	11 = November
05 = May	12 = December
06 = June	
07 = July	

Sequence Number

Unit Model Nomenclature Complete

	AGZ	030D	H	4	NN	S	S	LH	A	F	T	N	BN	M3NN	SAMB	27	AL	MN	N	N	N	NN	D2	NN	TE	NN				
Code	01	02	03	04	05	06	07	08	09	10	11	12	13	14	15	16	17	18	19	20	21	22	23	24	25	26				

	E	N	DM	DSU	DPN	NON	NNNN	NNNN	NNN	D00	NN	NN	NN	NN	NN	NNNN	N	N	0000	000										
Code	27	28	29	30	31	32	33	34	35	36	37	38	39	40	41	42	43	44	45	46										

	S	000	N	N	N	N	S	S	00	0000	0000000000000000																			
Code	47	48	49	50	51	52	53	54	55	56	57																			

1 Unit Type
AGZ = Air-Cooled Scroll Compressor Chiller

2 Unit Size & Vintage
025D - 070D = 4 Fan, 4 Compressor Units
075D - 100D = 6 Fan, 4 Compressor Units
110D - 130D = 8 Fan, 6 Compressor Units
140D - 180D = 10 Fan, 6 Compressor Units
190D = 12 Fan, 6 Compressor Units

3 Platform
H = Standard Package
B = Optional Remote Evaporator

4 Refrigerant
4 = R410A

5 Sound
NN = No Sound Reduction
WS = With Sound Reduction for the Compressors

6 Evaporator
S = Single Layer Insulation
D = Double Layer Insulation

7 Unit Operation
S = Standard Operation (40F - 50F LWT)
H = Standard Operation (51F - 60F LWT)
A = Lower Operation (34F - 39F LWT)
B = Lower Operation (15F - 33F LWT)

8 Evaporator Heads
UC = Universal Connection - Facing out Back (Sizes 075-130)
LH = Left Hand Connections (Sizes 025-070, Std. on 140-190)
RH = Right Hand Connections (Optional on 140-190)

9 Condenser Coil Fins
A = Aluminum Fin (Std.)
C = Copper Fin
B = Aluminum Fin with Prefab Blackfin Coating
E = Aluminum Fin with Electrofin Coating
F = Copper Fin with Electrofin Coating

10 Head Pressure
F = Fantrol (35F Min. Outdoor Temperature)
V = 1 Fan VFD/Circuit (-10F Min. Outdoor temperature)

11 Fan Motor
T = Totally Enclosed Type
L = Low Noise Fan Motor (Slower speed)

12 Guards
025D - 035D
N = No Condenser Coil Wire Grilles or Louvers
P = Base Frame Wire Grilles
R = Base Guard Louvers
040D - 190D
G = Condenser Coil Wire Grilles Only
F = Condenser Coil & Base Frame Wire Grilles
L = Condenser Coil Louvers
B = Cond. Coil Louvers & Base Guard Louvers
C = Cond. Coil Louvers & Base Frame Wire Grilles

13 Communication
NN = None
LN = LonMark
MN = Mod Bus
BN = BACnet w/ MSTP
EN = BACnet w/ Ethernet
NA = D-Net
LA = D-Net & LonMark
MA = D-Net & Mod Bus
BA = D-Net & BACnet w/ MSTP
EA = D-Net & BACnet w/ Ethernet

14 Controls
M3NN = MicroTech III w/o Remote Display
M3WD = MicroTech III w/ Remote Display

15 Control Box Ambient
SAMB = No Vents or Fans
HAMB = With Vents & Fans

16 Voltage
12 = 208V/60Hz/3
29 = 230V/60Hz/3
46 = 380V/60Hz/3
27 = 460V/60Hz/3
37 = 575V/60Hz/3
52 = 400V/50Hz/3

17 Starter
AL = Across the Line

18 Power Connection
MN = Multiple Pt. Power Block & no Ckt. Breakers
PC = Single Pt. Power Block & Ckt. Breakers
DC = Single Pt. Disconnect & Ckt. Breakers
WN = Multiple Pt. Disconnect & no Ckt. Breakers
DH = High Short Ckt. Current Rating w/ Single Pt. Disc./Breakers

19 Phase/Voltage Protection
N = None
V= Phase & Under/Over Voltage Protection w/ LED

20 Ground Fault
N = Without Unit Ground Fault Protection
F = With Unit Ground Fault Protection

Unit Model Nomenclature Complete, Continued

21 Unit Options
N = No unit options
C = 115V GFI Outlet

22 Water Flow
NN = No Water Flow Indicator
AA = Water Flow Indicator on Evaporator only

23 Field Options
D1 = Dual Evap. Pumps - Single Control Output
D2 = Dual Evap. Pumps - Dual Control Output
S1 = Single Evap. Pumps - Single Control Output

24 Tubing Options
NN = Std. - Liquid & Discharge Line Shut-off Valves
NS = Std. plus Suction Shut-off Valves
HG = Liquid, Discharge and HGBP Shut-off Valves
HS = Liquid, Disch., Suct. & HGBP Shut-off Valves
FH = Liquid & Disch. Shut-off Valves, HGBP Ready

25 Unit Controls
TE = Thermal Expansion Valve
EE = Electronic Expansion Valve

26 Water Pump
NN = None
Field Supplied Power- 1800 RPM Motor
FB = 1HP Pump Motor
FC = 1.5HP Pump Motor
FD = 2HP Pump Motor
FE = 3HP Pump Motor
FG = 5HP Pump Motor
FH = 7.5HP Pump Motor
FJ = 10HP Pump Motor
FK = 15HP Pump Motor
FL = 20HP Pump Motor
FM = 25HP Pump Motor
Field Supplied Power- 3600 RPM Motor
GB = 1HP Pump Motor
GC = 1.5HP Pump Motor
GD = 2HP Pump Motor
GE = 3HP Pump Motor
GG = 5HP Pump Motor
GH = 7.5HP Pump Motor
GJ = 10HP Pump Motor
GK = 15HP Pump Motor
GL = 20HP Pump Motor
GM = 25HP Pump Motor
Unit Supplied Power- 1800 RPM Motor
UB = 1HP Pump Motor
UC = 1.5HP Pump Motor
UD = 2HP Pump Motor
UE = 3HP Pump Motor
UG = 5HP Pump Motor
UH = 7.5HP Pump Motor
UJ = 10HP Pump Motor
UK = 15HP Pump Motor
UL = 20HP Pump Motor
UM = 25HP Pump Motor
Unit Supplied Power- 3600 RPM Motor
VB = 1HP Pump Motor
VC = 1.5HP Pump Motor
VD = 2HP Pump Motor
VE = 3HP Pump Motor
VG = 5HP Pump Motor
VH = 7.5HP Pump Motor
VJ = 10HP Pump Motor
VK = 15HP Pump Motor
VL = 20HP Pump Motor
VM = 25HP Pump Motor

27 Approvals
A= No ETL/CETL or AHRI or ASHRAE 90.1 approval
B= Chicago Relief Val. w/ ETL/CETL & No AHRI & ASHRAE 90.1
C= Chicago Relief Val. w/ ETL/CETL & AHRI & ASHRAE 90.1
D= ETL/CETL Approval & No AHRI & ASHRAE 90.1
E= ETL/CETL Approval & AHRI & ASHRAE 90.1
F = Chicago Relief Val. w/ ETL/CETL & No AHRI or ASHRAE 90.1
V= Chicago Relief Val. w/ ETL/CETL & AHRI & No ASHRAE 90.1
W= ETL/CETL Approval & AHRI & No ASHRAE 90.1
Z= ETL/CETL Approval & No AHRI & No ASHRAE 90.1

28 CRN- Evaporator
N = No CRN Required
1 = CRN- British Columbia
2 = CRN- Alberta
3 = CRN- Saskatchewan
4 = CRN- Manitoba
5 = CRN- Ontario
6 = CRN- Quebec
7 = CRN- New Brunswick
8 = CRN- Nova Scotia
9 = CRN- Prince Edward Island
0 = CRN- Newfoundland
U = Yukon

29 Brand Name
DM= Daikin McQuay
MC= McQuay
JD= Daikin

30 Unit Startup
NSU = Startup by Others
DSU = Startup, Domestic
CSU = Startup, Canadian
ISU = International, No Startup Provided

31 Standard Warranty
DPN = Domestic, 1 yr. std. Warranty- Parts Only
CPN = Canadian, 1 yr. std. Warranty- Parts Only
TPN = International, 1 yr. std. Warranty- Parts Only
NON = No Standard Warranty

32 1st Year Labor Warranty
NON = None
AC1 = Compressor Only
AE1 = Entire Unit

33 Extended Compressor Warranty
NNNN = None
CPE1 = 1 yr.- Parts Only
CBE1 = 1 yr.- Parts & Labor
CPE2 = 2 yr.- Parts Only
CBE2 = 2 yr.- Parts & Labor
CPE3 = 3 yr.- Parts Only
CBE3 = 3 yr.- Parts & Labor

Unit Model Nomenclature Complete, Continued

CPE4 = 4 yr.- Parts Only
CBE4 = 4 yr.- Parts & Labor

34 Extended Unit Warranty
NNNN = None
EPE1 = 1 yr. Entire Unit- Parts Only
EBE1 = 1 yr. Entire Unit- Parts & Labor
EPE2 = 2 yr. Entire Unit- Parts Only
EBE2 = 2 yr. Entire Unit- Parts & Labor
EPE3 = 3 yr. Entire Unit- Parts Only
EBE3 = 3 yr. Entire Unit- Parts & Labor
EPE4 = 4 yr. Entire Unit.- Parts Only
EBE4 = 4 yr. Entire Unit- Parts & Labor
DPE1 = 1 yr. Entire Unit w/ Dual Pumps- Parts Only
DBE1 = 1 yr. Entire Unit w/ Dual Pumps- Parts & Labor
DPE2 = 2 yr. Entire Unit w/ Dual Pumps- Parts Only
DBE2 = 2 yr. Entire Unit w/ Dual Pumps- Parts & Labor
DPE3 = 3 yr. Entire Unit w/ Dual Pumps- Parts Only
DBE3 = 3 yr. Entire Unit w/ Dual Pumps- Parts & Labor
DPE4 = 4 yr. Entire Unit w/ Dual Pumps- Parts Only
DBE4 = 4 yr. Entire Unit w/ Dual Pumps- Parts & Labor
SPE1 = 1 yr. Entire Unit w/ Single Pumps- Parts Only
SBE1 = 1 yr. Entire Unit w/ Single Pumps- Parts & Labor
SPE2 = 2 yr. Entire Unit w/ Single Pumps- Parts Only
SBE2 = 2 yr. Entire Unit w/ Single Pumps- Parts & Labor
SPE3 = 3 yr. Entire Unit w/ Single Pumps- Parts Only
SBE3 = 3 yr. Entire Unit w/ Single Pumps- Parts & Labor
SPE4 = 4 yr. Entire Unit w/ Single Pumps- Parts Only
SBE4 = 4 yr. Entire Unit w/ Single Pumps- Parts & Labor

35 Refrigerant Warranty
NNN = No Refrigerant Warranty
RS1 = 1 yr. Warranty
RS2 = 2 yr. Warranty
RS3 = 3 yr. Warranty
RS4 = 4 yr. Warranty
RS5 = 5 yr. Warranty

36 Delay Warranty Start
D00 = No Additional Months
D02 = 2 Additional Months
D04 = 4 Additional Months
D06 = 6 Additional Months
D08 = 8 Additional Months
D10 = 10 Additional Months
D12 = 12 Additional Months

37 thru 41 Not an AGZ Code Item
NN = No Requirement

42 Pump Type
NNNN = No Pump Package
PPZS = Pump Package- Single Pump
PPZD = Pump Package- Dual Pump

43 Not an AGZ Code Item
N = No Requirement

44 Pump Connection
N = No Pump Package
2 = 2.5” Pump Connection
3 = 3.0” Pump Connection
8 = 8.0” Pump Connection

45 Pump Flow
0000 = Number determined by Unit Size

46 Total Head
000 = Number determined by Selection Input

47 Pump Package Starter
N = No Pump Package
S = Pump Package Starter
V = Pump Package Starter w/ VFD w/o Line Reactors
R = Pump Package Starter w/ VFD w/ Line Reactors

48 Percentage of Glycol
000 = None
E00 = % of Ethylene (E10 = 10% Ethylene)
P00 = % of Propylene (P10 = 10% Propylene)

49 Pressure Gauges
N = No Pressure Gauges
G = Pressure Gauges

50 Pump Suction Valve
N = No Pump Package Suction Shut off Valve
V = Pump Package Suction Shut off Valve

51 Pump Discharge Valve
N = No Pump Package Discharge Shut off Valve
V = Pump Package Discharge Shut off Valve

52 Expansion Tank
N = No Expansion Tank
W = Factory Installed Expansion Tank

53 Pump Special Features
S = Standard Unit

54 Unit Special Features
S = Standard Unit
X = Special Features

55 Latest Revision
00 = Original Revision
0A = 0A Revision

56 Impeller Trim
0000 = Final Pump Impeller Size

57 Pump Number
0000000000000000 = Number determined by Selection Input

Electrical Legend

Schematic Sym.	Description	Location
ABR	Relay- Alarm Bell	Control Box
CC1, 2	Circuit Controller (Controller Expansion Module)	Control Box
CB1- 6	Circuit Breaker- Compressor	Control Box
CB7	Circuit Breaker- Pump Panel	Control Box
CBM	Disconnect Switch	Pump Pkg. Control Box
CR1- 3	Relay	Pump Pkg. Control Box
CT-GF1, 2	Current Transformer- Ground Fault	Control Box
DS1, 2	Disconnect- Main	Control Box
EEXV1, 2	Expansion Valve Controller	Control Box
EXV1, 2	Expansion Valve	Liquid Line
FAN1- 3	Control Box Exhaust Fan	Control Box
FTB1, 2	Terminal Block- Exhaust Fans	Control Box
FU4, 5	Fuse- Primary, Control Transformer	Control Box/Pump Pkg. CB
FU6, 6A	Fuse- Secondary, Control Transformer	Control Box/Pump Pkg. CB
FU7	Fuse- Evaporator Heater	Control Box
FU8	Fuse- Outlet	Control Box
FU11-1 to FU21-3	Fuse- Fan Circuit (HSCCR units only, Code 18= DH)	Control Box
FU16	Fuse- Secondary, Control Transformer	Control Box
GF1, 2	Relay- Ground Fault	Control Box
GND1, 2	Ground	Control Box
GLG1	Ground Lug	Pump Pkg. Control Box
FLO SW	Flow Switch- Evaporator	Evaporator
HP1	Switch- High Pressure Circuit # 1	Compressors
HP2	Switch- High Pressure Circuit # 2	Compressors
HPR1- 4	Relay- Motor Protector	Control Box
HTR1- 6	Heater- Compressor	Compressors
LR1- 3	Line Reactor- Fan	Control Box
M1- 6	Contactor- Compressor/Pump Motor	Control Box/Pump Pkg. CB
M11- 17	Contactor- Fan Circuit #1	Control Box
M21- 27	Contactor- Fan Circuit #2	Control Box
MPR1, 2	Relay- Compressor Motor Protector	Control Box
MSP1- 14	Motor Protector- Fan/Pump Motor	Control Box/Pump Pkg. CB
MP1- 6	Motor Protector- Compressor	Compressors
OLF	115V Outlet	Control Box
PD1, 2	Power Block- Main	Control Box
PS1, 2	Switch- Pumpdown	Control Box
PVM1, 2	Phase Voltage Monitor	Control Box
S00	Sensor- Leaving Water Temperature	Evaporator
S01	Pressure Transducer- Suction Circuit #1	Suction Line
S02	Pressure Transducer- Suction Circuit #2	Suction Line
S03	Pressure Transducer- Discharge Circuit #1	Discharge Line
S04	Pressure Transducer- Discharge Circuit # 2	Discharge Line
S05	Sensor- Outside Air Temperature	Control Box
S08	Sensor- Entering Water Temperature	Evaporator
S12	Sensor- Suction Temperature Circuit #1	Suction Line
S13	Sensor- Suction Temperature Circuit #2	Suction Line
SS1	Switch, 3 position	Pump Pkg. Control Box
SV1	Solenoid- Circuit #1	Liquid Line

Electrical Legend, Continued

Schematic Sym.	Description	Location
SV2 SV5	Solenoid- Circuit #2 Solenoid- Hot Gas Bypass Circuit #1	Liquid Line Hot Gas Bypass Line
SV6	Solenoid- Hot Gas Bypass Circuit #2	Hot Gas Bypass Line
SN1- 6	Snubber	Control Box
SR1, 2, 5, 6	Relay- Solenoid	Control Box
SW1	Switch- Unit Shutoff	Control Box
T1	Transformer Control (120V Secondary)	Control Box/Pump Pkg. CB
T2, 3	Transformer Control (24V Secondary)	Control Box
TB1	Terminal Block (120V)	Control Box/Pump Pkg. CB
TB2, 5, 6	Terminal Block (24V)	Control Box
TB3, 4	Terminal Block, VFD	Control Box
TS1	Thermostat- Exhaust Fan	Control Box
TS2	Thermostat- Control Box Heater	Control Box
UC	Unit Controller	Control Box
VFD1- 3	VFD- Fan/Pump Motor	Control Box/Pump Pkg. CB

Unit Controls

Control Box Layout Diagrams [1]

COM Module Location

AGZ025- 130

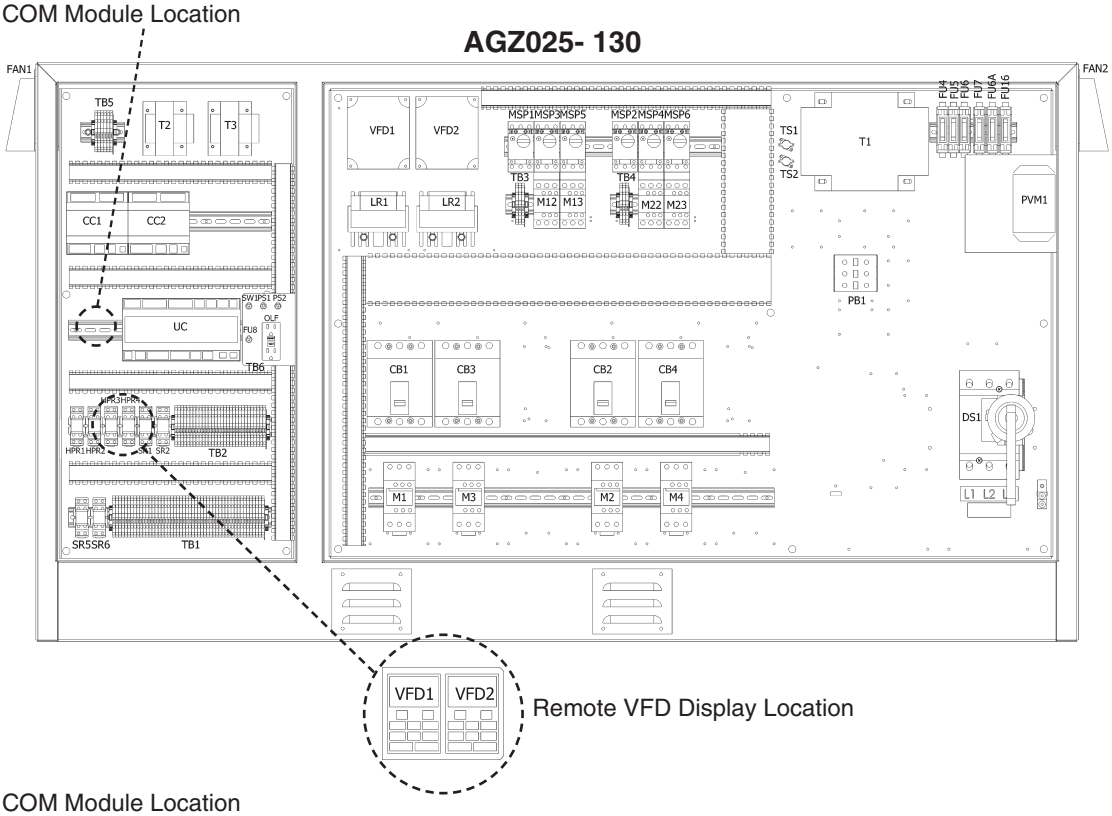

Remote VFD Display Location

COM Module Location

AGZ140- 190

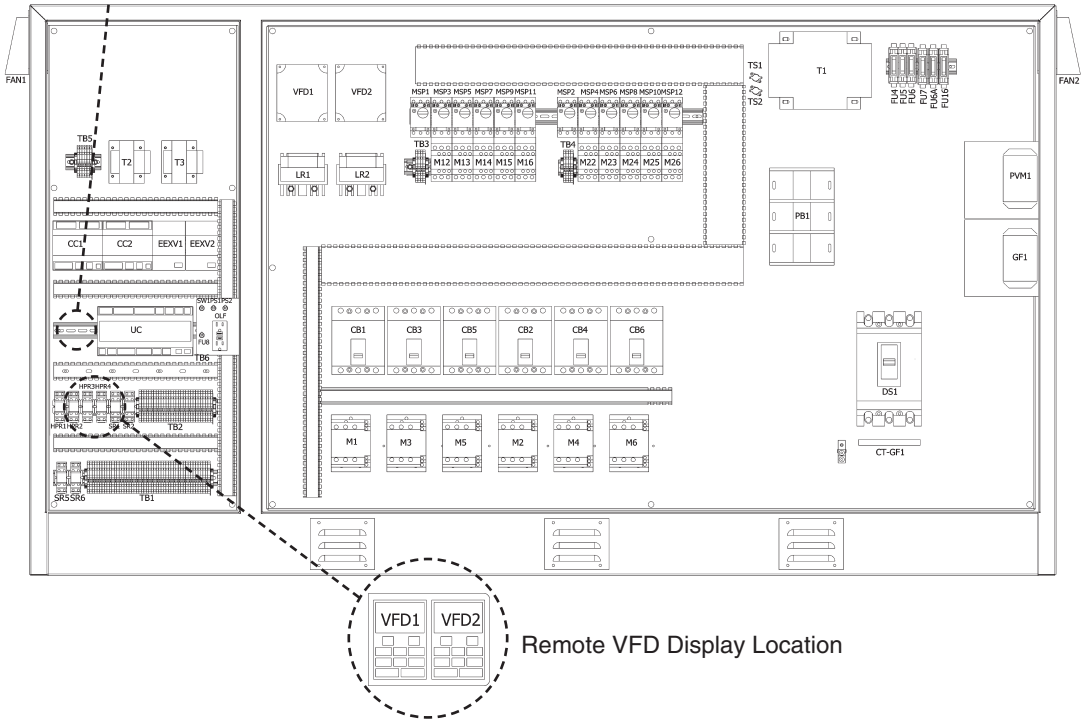

Remote VFD Display Location

[1] Diagrams shown above are representative of typical Single Point Connection Control Box layouts. Components and component layout will vary depending on unit size and options selected. The Control Box may be called a “Switch Box” in unit documentation.

Unit Controls

Control Box Component Label Diagram

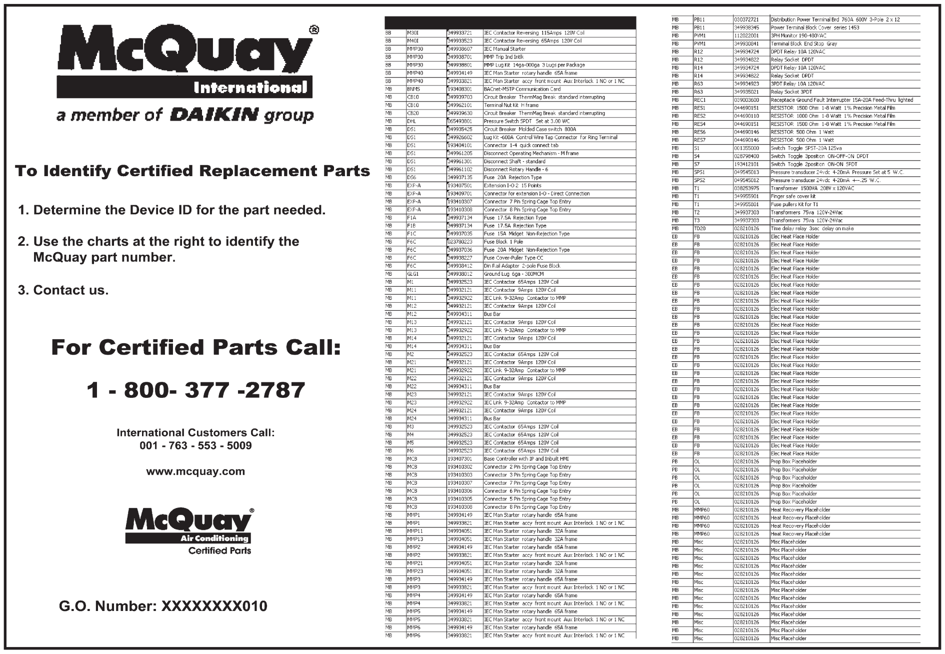

BB	M30I	349933721	IEC Contactor Reversing 115Amps 120V Coil
BB	M40I	349933523	IEC Contactor Reversing 65Amps 120V Coil
BB	MMP30	349938607	IEC Manual Starter
BB	MMP30	349938701	MMP Trip Ind Intlk
BB	MMP30	349938801	MMP Lug Kit 14ga-000ga 3 Lugs per Package
BB	MMP40	349934149	IEC Man Starter rotary handle 65A frame
BB	MMP40	349933821	IEC Man Starter accy front mount Aux Interlock 1 NO or 1 NC
MB	BNMS	193408301	BACnet-MSTP Communication Card
MB	CB10	349939703	Circuit Breaker ThermMag Break standard interrupting
MB	CB10	349962101	Terminal Nut Kit H frame
MB	CB20	349939630	Circuit Breaker ThermMag Break standard interrupting
MB	DHL	065493801	Pressure Switch SPDT Set at 3.00 WC
MB	DS1	349935425	Circuit Breaker Molded Case switch 800A
MB	DS1	349926602	Lug Kit -600A Control Wire Tap Connector for Ring Terminal
MB	DS1	193404101	Connector 1-4 quick connect tab
MB	DS1	349961205	Disconnect Operating Mechanism - M frame
MB	DS1	349961301	Disconnect Shaft - standard
MB	DS1	349961102	Disconnect Rotary Handle - 6
MB	DS6	349937135	Fuse 20A Rejection Type
MB	EXP-A	193407501	Extension I-O 2 15 Points
MB	EXP-A	193409701	Connector for extension I-O - Direct Connection
MB	EXP-A	193410307	Connector 7 Pin Spring Cage Top Entry
MB	EXP-A	193410308	Connector 8 Pin Spring Cage Top Entry
MB	F1A	349937134	Fuse 17.5A Rejection Type
MB	F1B	349937134	Fuse 17.5A Rejection Type
MB	F1C	349937035	Fuse 15A Midget Non-Rejection Type
MB	F6C	023780223	Fuse Block 1 Pole
MB	F6C	349937036	Fuse 20A Midget Non-Rejection Type
MB	F6C	349938227	Fuse Cover-Puller Type CC
MB	F6C	349938412	Din Rail Adapter 2-pole Fuse Block
MB	GLG1	349938012	Ground Lug 6ga - 300MCM
MB	M1	349932523	IEC Contactor 65Amps 120V Coil
MB	M11	349932121	IEC Contactor 9Amps 120V Coil
MB	M11	349932922	IEC Link 9-32Amp Contactor to MMP
MB	M12	349932121	IEC Contactor 9Amps 120V Coil
MB	M12	349934311	Bus Bar
MB	M13	349932121	IEC Contactor 9Amps 120V Coil
MB	M13	349932922	IEC Link 9-32Amp Contactor to MMP
MB	M14	349932121	IEC Contactor 9Amps 120V Coil
MB	M14	349934311	Bus Bar
MB	M2	349932523	IEC Contactor 65Amps 120V Coil
MB	M21	349932121	IEC Contactor 9Amps 120V Coil
MB	M21	349932922	IEC Link 9-32Amp Contactor to MMP
MB	M22	349932121	IEC Contactor 9Amps 120V Coil
MB	M22	349934311	Bus Bar
MB	M23	349932121	IEC Contactor 9Amps 120V Coil
MB	M23	349932922	IEC Link 9-32Amp Contactor to MMP
MB	M24	349932121	IEC Contactor 9Amps 120V Coil
MB	M24	349934311	Bus Bar
MB	M3	349932523	IEC Contactor 65Amps 120V Coil
MB	M4	349932523	IEC Contactor 65Amps 120V Coil
MB	M5	349932523	IEC Contactor 65Amps 120V Coil
MB	M6	349932523	IEC Contactor 65Amps 120V Coil
MB	MCB	193407301	Base Controller with IP and Inbuilt HMI
MB	MCB	193410302	Connector 2 Pin Spring Cage Top Entry
MB	MCB	193410303	Connector 3 Pin Spring Cage Top Entry
MB	MCB	193410307	Connector 7 Pin Spring Cage Top Entry
MB	MCB	193410306	Connector 6 Pin Spring Cage Top Entry
MB	MCB	193410305	Connector 5 Pin Spring Cage Top Entry
MB	MCB	193410308	Connector 8 Pin Spring Cage Top Entry
MB	MMP1	349934149	IEC Man Starter rotary handle 65A frame
MB	MMP1	349933821	IEC Man Starter accy front mount Aux Interlock 1 NO or 1 NC
MB	MMP11	349934051	IEC Man Starter rotary handle 32A frame
MB	MMP13	349934051	IEC Man Starter rotary handle 32A frame
MB	MMP2	349934149	IEC Man Starter rotary handle 65A frame
MB	MMP2	349933821	IEC Man Starter accy front mount Aux Interlock 1 NO or 1 NC
MB	MMP21	349934051	IEC Man Starter rotary handle 32A frame
MB	MMP23	349934051	IEC Man Starter rotary handle 32A frame
MB	MMP3	349934149	IEC Man Starter rotary handle 65A frame
MB	MMP3	349933821	IEC Man Starter accy front mount Aux Interlock 1 NO or 1 NC
MB	MMP4	349934149	IEC Man Starter rotary handle 65A frame
MB	MMP4	349933821	IEC Man Starter accy front mount Aux Interlock 1 NO or 1 NC
MB	MMP5	349934149	IEC Man Starter rotary handle 65A frame
MB	MMP5	349933821	IEC Man Starter accy front mount Aux Interlock 1 NO or 1 NC
MB	MMP6	349934149	IEC Man Starter rotary handle 65A frame
MB	MMP6	349933821	IEC Man Starter accy front mount Aux Interlock 1 NO or 1 NC

MB	PB11	030372721	Distribution Power Terminal Brd 760A 600V 3-Pole 2 x 12
MB	PB11	349938345	Power Terminal Block Cover series 1453
MB	PVM1	112022001	3PH Monitor 190-480VAC
MB	PVM1	349930841	Terminal Block End Stop Gray
MB	R12	349934724	DPDT Relay 10A 120VAC
MB	R12	349934822	Relay Socket DPDT
MB	R14	349934724	DPDT Relay 10A 120VAC
MB	R14	349934822	Relay Socket DPDT
MB	R63	349934923	3PDT Relay 10A 120VAC
MB	R63	349935021	Relay Socket 3PDT
MB	REC1	039003600	Receptacle Ground Fault Interrupter 15A-20A Feed-Thru lighted
MB	RES1	044690151	RESISTOR 1500 Ohm 1-8 Watt 1% Precision Metal Film
MB	RES2	044690110	RESISTOR 1000 Ohm 1-8 Watt 1% Precision Metal Film
MB	RES4	044690151	RESISTOR 1500 Ohm 1-8 Watt 1% Precision Metal Film
MB	RES6	044690146	RESISTOR 500 Ohm 1 Watt
MB	RES7	044690146	RESISTOR 500 Ohm 1 Watt
MB	S1	001355000	Switch Toggle SPST-20A 125va
MB	S4	028798400	Switch Toggle 3position ON-OFF-ON DPDT
MB	S7	193412101	Switch Toggle 2position ON-ON SPDT
MB	SPS1	049545013	Pressure transducer 24vdc 4-20mA Pressure Set at 5 W.C.
MB	SPS2	049545012	Pressure transducer 24vdc 4-20mA +-.25 W.C.
MB	T1	038253975	Transformer 1500VA 208V x 120VAC
MB	T1	349955901	Finger safe cover kit
MB	T1	349955801	Fuse pullers Kit for T1
MB	T2	349937303	Transformers 75va 120V-24Vac
MB	T3	349937303	Transformers 75va 120V-24Vac
MB	TD20	028210126	Time delay relay 3sec delay on make
EB	FB	028210126	Elec Heat Place Holder
EB	FB	028210126	Elec Heat Place Holder
EB	FB	028210126	Elec Heat Place Holder
EB	FB	028210126	Elec Heat Place Holder
EB	FB	028210126	Elec Heat Place Holder
EB	FB	028210126	Elec Heat Place Holder
EB	FB	028210126	Elec Heat Place Holder
EB	FB	028210126	Elec Heat Place Holder
EB	FB	028210126	Elec Heat Place Holder
EB	FB	028210126	Elec Heat Place Holder
EB	FB	028210126	Elec Heat Place Holder
EB	FB	028210126	Elec Heat Place Holder
EB	FB	028210126	Elec Heat Place Holder
EB	FB	028210126	Elec Heat Place Holder
EB	FB	028210126	Elec Heat Place Holder
EB	FB	028210126	Elec Heat Place Holder
EB	FB	028210126	Elec Heat Place Holder
EB	FB	028210126	Elec Heat Place Holder
EB	FB	028210126	Elec Heat Place Holder
EB	FB	028210126	Elec Heat Place Holder
EB	FB	028210126	Elec Heat Place Holder
EB	FB	028210126	Elec Heat Place Holder
EB	FB	028210126	Elec Heat Place Holder
EB	FB	028210126	Elec Heat Place Holder
EB	FB	028210126	Elec Heat Place Holder
EB	FB	028210126	Elec Heat Place Holder
EB	FB	028210126	Elec Heat Place Holder
EB	FB	028210126	Elec Heat Place Holder
PB	OL	028210126	Prop Box Placeholder
PB	OL	028210126	Prop Box Placeholder
PB	OL	028210126	Prop Box Placeholder
PB	OL	028210126	Prop Box Placeholder
PB	OL	028210126	Prop Box Placeholder
PB	OL	028210126	Prop Box Placeholder
MB	MMP60	028210126	Heat Recovery Placeholder
MB	MMP60	028210126	Heat Recovery Placeholder
MB	MMP60	028210126	Heat Recovery Placeholder
MB	MMP60	028210126	Heat Recovery Placeholder
MB	Misc	028210126	Misc Placeholder
MB	Misc	028210126	Misc Placeholder
MB	Misc	028210126	Misc Placeholder
MB	Misc	028210126	Misc Placeholder
MB	Misc	028210126	Misc Placeholder
MB	Misc	028210126	Misc Placeholder
MB	Misc	028210126	Misc Placeholder
MB	Misc	028210126	Misc Placeholder
MB	Misc	028210126	Misc Placeholder
MB	Misc	028210126	Misc Placeholder
MB	Misc	028210126	Misc Placeholder
MB	Misc	028210126	Misc Placeholder
MB	Misc	028210126	Misc Placeholder

Note: All units will have a label similar to the one shown above pasted to the inside of the Control Box door. This label contains schematic designators, part descriptions, and McQuay part numbers. The label shown above is for representative purposes only. Actual part numbers will vary depending upon unit options and features.

For any control components not detailed, or for unit specific controls, please contact Daikin McQuay Parts with the Control Box Serial Number and Control Box Part/GOI Number.

Unit Controls
Control Box Common Components

For any control components not detailed or for unit specific controls, please contact Daikin McQuay Parts with the Control Box Serial Number and Control Box Part/GOI Number.

Schem. Sym.	Description		Part Number
UC	Controller- Unit, MicroTech III [1]		193407301
	Battery- Unit Controller		193409001
-	Remote Display Module Field installation Kit		350147416
	Remote Display Module		193408001
	2 Pin Connector		193410302
CC1, 2	Controller- Circuit, I/O Module		193407501
	Connector- Extension I/O Direct Connect [2]		193409701
	Connector- 2-Pin Spring Cage, Top Entry [2]		193410302
	Connector- 3-Pin Spring Cage, Top Entry [2]		193410303
	Connector- 4-Pin Spring Cage, Top Entry [2]		193410304
	Connector- 5-Pin Spring Cage, Top Entry [2]		193410305
	Connector- 6-Pin Spring Cage, Top Entry [2]		193410306
	Connector- 7-Pin Spring Cage, Top Entry [2]		193410307
	Connector- 8-Pin Spring Cage, Top Entry [2]		193410308
COM	Communication Card [3]		
	BACnet w/ MSTP	Code 13= BN	350147414
	BACnet w/ Ethernet	Code 13= EN	350147415
	Lon Mark	Code 13= LN	350147412
	MODBus	Code 13= MN	350147413
CT-GF1, 2	Ground Fault CT		
	100- 600A Disconnect		300043558
	800- 1200A Disconnect		193461101
EEXV1, 2	Controller- Expansion Valve [1]		193407801
FAN1- 3	Fan- Control Box Exhaust		193419103
	Fan Guard		193420301
	Fan Filter Kit		193466101
FTB1, 2	Terminal Block Jumper- Exhaust Fans		349930641
	Terminal Block- End Stop		349930841
	Terminal Block- End Plate		349930741
GF1, 2	Relay- Ground Fault		330315101
HPR1- 4	Relay- Motor Protector		349934764
	Socket- Motor Protector Relay		349934822
OLF	GFI Outlet- 115VAC		039003600
PD1, 2	Power Distribution Block [4]		
	Block- Power Distribution, Single Point	Code 18= PC, DC	193471101
	Block- Power Distribution, Multi Point	Code 18= MN, WN	193471102
PS1,2	Switch, Toggle- Pumpdown	SPST	802005045

[1] This Controller must be programmed in order to function correctly. When ordering a replacement, provide the unit model and serial number so the unit specific software code can be loaded before shipment.
[2] These parts are NOT provided with the Circuit Controller. Order separately if needed.
[3] If the unit is equipped with D-Net Communications (Code 13= NA, LA, MA, BA, or EA), contact your local McQuay Factory Service office.
[4] If Code 18= DH (High Short Circuit Current Rating), contact Daikin McQuay Parts with model and serial number information so that the required part(s) can be identified.

Unit Controls
Control Box Common Components, Continued

For any control components not detailed or for unit specific controls, please contact Daikin McQuay Parts with the Control Box Serial Number and Control Box Part/GOI Number.

Schem. Sym.	Description		Part Number
PVM1, 2	Phase Voltage Monitor	Code 19= V	
	208- 230V 60Hz	Unit Rev. 00, Code 55= 00	070269963
	208- 230V 60Hz	Unit Rev. 0A, Code 55= 0A	112022001
	400V 50Hz	Unit Rev. 00, Code 55= 00	070269967
	400V 50Hz	Unit Rev. 0A, Code 55= 0A	112022001
	380, 460V 60 Hz	Unit Rev. 00, Code 55= 00	070269967
	380, 460V 60 Hz	Unit Rev. 0A, Code 55= 0A	112022001
	575V 60Hz	Unit Rev. 00, Code 55= 00	070269966
	575V 60Hz	Unit Rev. 0A, Code 55= 0A	112022002
SR1- 6	Relay- Solenoid		349934764
	Socket- Solenoid Relay		349934822
SN1- 6	Snubber		193410501
SW1	Switch, Toggle- Unit Shut Down	SPST	802005045
T1	Transformer- Control 1.5KVA [1]		
	208V		038253916
	230V		038253991
	380V		038253916
	400V		038253928
	460V		038253991
	575V		038253991
T1	Transformer- Control 3.0KVA [1]		
	208V		193465801
	230V		193465802
	380V		193465801
	400V		193465803
	460V		193465802
	575V		193465804
T2	Transformer- 120V/24V	100VA	330386105
T3	Transformer- 120V/24V	100VA	330386105
TB1- 6	Terminal Block Assy [2]		349930641
	Terminal Block- Spring Thru Type 4 x 4 Connector [2]		193469001
	Terminal Block- End Stop [2]		349930841
	Terminal Block- End Plate [2]		349930741
	Terminal Block- 2 x 2 Grounding Through Terminal [2]		349930647
	Terminal Block- Jumper		193469201
TS1	Thermostat- Exhaust Fan		193418404
TS2	Thermostat- Control Box Heater		193467001
VFD1- 3	VFD	(2HP)	
	208V		193466001
	400V- 460V		193466002
	575V		193466003
	LED Operator		193466601
	Remote Interface		193466701
	Patch Cable		193466801

[1] T1 KVA is determined by unit options. Confirm KVA of Transformer before ordering, or contact Daikin McQuay Parts with model and serial number information so that the required part(s) can be identified.
[2] Quantity varies per application. Determine quantity required before ordering.

Unit Controls

Compressor Contactors: M1- 6 & Compressor Circuit Breakers: CB1- 6
Code 18= PC, DC [2]

For any control components not detailed or for unit specific controls, please contact Daikin McQuay Parts with the Control Box Serial Number and Control Box Part/GOI Number.

Circuit #1 Compressor Contactors: M1- 6

Unit Size	Description	Qty [1]	208-230/60/3	380/60/3	400-460/60/3	575/60/3
025	7.5 / 7.5 HP Tandem	1	193426821	349932321	349932321	349932321
030, 035	9 / 9 HP Tandem	1	193426821	349932322	349932321	349932321
040	10 / 10 HP Tandem	1	193426822	349932322	349932322	349932321
045	12 / 12 HP Tandem	1	193426823	349932322	349932322	349932322
050, 055	13 / 13 HP Tandem	1	349932621	193426821	349932322	349932322
060, 065	15 / 15 HP Tandem	1	349932621	193426822	193426821	193426821
070	15 / 20 HP Tandem					
	15HP (M1)	1	349932621	193426822	193426821	193426821
	20HP (M3)	1	349932721	193426823	193426822	193426822
075, 080	20 / 20 HP Tandem	1	349932721	193426823	193426822	193426822
090	26 / 26 HP Tandem Rev. 00	1	349932721	349932621	193426823	193426823
090	26 / 26 HP Tamdem Rev. 0A	1	349932721		193426823	
100	26 / 30 HP Tandem					
	26HP (M3)	1	349932721	349932621	193426823	193426823
	30HP (M1)	1	349932722	349932721	349932621	193426823
110, 125	20 + 20 + 20 HP Singles	1	349932721	193426823	193426822	193426822
130- 160	26 + 26 + 26 HP Singles	1	349932721	349932621	193426823	193426823
180- 190	30 + 30 + 30 HP Singles	1	349932722	349932721	349932621	193426823

Circuit #1 Compressor Circuit Breakers: CB1- 6

Unit Size	Description	Qty [1]	208-230/60/3	380/60/3	400-460/60/3	575/60/3
025	7.5 / 7.5 HP Tandem	1	349939629	349939624	349939624	349939603
030	9 / 9 HP Tandem	1	349939629	349939626	349939624	349939603
035, 040	10 / 10 HP Tandem	1	349939630	349939628	349939626	349939603
045	12 / 12 HP Tandem	1	349939632	349939628	349939626	349939604
050	13 / 13 HP Tandem	1	349939633	349939629	349939628	349939606
055- 065	15 / 15 HP Tandem	1	349939633	349939630	349939628	349939608
070	15 / 20 HP Tandem					
	15HP (CB1)	1	349939633	349939630	349939628	349939608
	20HP (CB3)	1	193428708	349939631	349939629	349939608
075	20 / 20 HP Tandem	1	193428708	349939631	349939629	349939608
080, 090	26 / 26 HP Tandem	1	193428707	349939633	349939631	349939609
100	26 / 30 HP Tandem					
	26HP (CB3)	1	193428707	349939633	349939631	349939609
	30HP (CB1)	1	193428706	193428708	349939633	349939611
110	20 + 20 + 20 HP Singles	1	193428708	349939631	349939629	349939608
125- 140	26 + 26 + 26 HP Singles	1	193428707	349939633	349939631	349939609
160- 190	30 + 30 + 30 HP Singles	1	193428706	193428708	349939633	349939611

[1] Quantities listed are PER compressor.
[2] For HSCCR units (Code 18= DH) contact Daikin McQuay Parts with model and serial number information so that the required parts(s) can be identified.

Unit Controls

Compressor Contactors: M1- M6 & Compressor Circuit Breakers: CB1-6
Code 18= PC, DC [2]

For any control components not detailed or for unit specific controls, please contact Daikin McQuay Parts with the Control Box Serial Number and Control Box Part/GOI Number.

Circuit #2 Compressor Contactors

Unit Size	Description	Qty [1]	208-230/60/3	380/60/3	400-460/60/3	575/60/3
025	7.5 / 7.5 HP Tandem	1	193426821	349932321	349932321	349932321
030	9 / 9 HP Tandem	1	193426821	349932322	349932321	349932321
035, 040	10 / 10 HP Tandem	1	193426822	349932322	349932322	349932321
045	12 / 12 HP Tandem	1	193426823	349932322	349932322	349932322
050	13 / 13 HP Tandem	1	349932621	193426821	349932322	349932322
055- 065	15 / 15 HP Tandem	1	349932621	193426822	193426821	193426821
070	15 / 20 HP Tandem					
	15HP (M2)	1	349932621	193426822	193426821	193426821
	20HP (M4)	1	349932721	193426823	193426822	193426822
075	20 / 20 HP Tandem	1	349932721	193426823	193426822	193426822
080, 090	26 / 26 HP Tandem	1	349932721	349932621	193426823	193426823
100	26 / 30 HP Tandem					
	26HP (M2)	1	349932721	349932621	193426823	193426823
	30HP (M4)	1	349932722	349932721	349932621	193426823
110	20 + 20 + 20 HP Singles	1	349932721	193426823	193426822	193426822
125- 140	26 + 26 + 26 HP Singles	1	349932721	349932621	193426823	193426823
160- 190	30 + 30 + 30 HP Singles	1	349932722	349932721	349932621	193426823

Circuit #2 Compressor Circuit Breakers

Unit Size	Description	Qty [1]	208-230/60/3	380/60/3	400-460/60/3	575/60/3
025	7.5 / 7.5 HP Tandem	1	349939629	349939624	349939624	349939603
030	9 / 9 HP Tandem	1	349939629	349939626	349939624	349939603
035, 040	10 / 10 HP Tandem	1	349939630	349939628	349939626	349939603
045	12 / 12 HP Tandem	1	349939632	349939628	349939626	349939604
050	13 / 13 HP Tandem	1	349939633	349939629	349939628	349939606
055- 065	15 / 15 HP Tandem	1	349939633	349939630	349939628	349939608
070	15 / 20 HP Tandem					
	15HP (CB2)	1	349939633	349939630	349939628	349939608
	20HP (CB4)	1	193428708	349939631	349939629	349939608
075	20 / 20 HP Tandem	1	193428708	349939631	349939629	349939608
080, 090	26 / 26 HP Tandem	1	193428707	349939633	349939631	349939609
100	26 / 30 HP Tandem					
	26HP (CB2)	1	193428707	349939633	349939631	349939609
	30HP (CB4)	1	193428706	193428708	349939633	349939611
110	20 + 20 + 20 HP Singles	1	193428708	349939631	349939629	349939608
125- 140	26 + 26 + 26 HP Singles	1	193428707	349939633	349939631	349939609
160- 190	30 + 30 + 30 HP Singles	1	193428706	193428708	349939633	349939611

[1] Quantities listed are PER compressor.
[2] For HSCCR units (Code 18= DH) contact Daikin McQuay Parts with model and serial number information so that the required parts(s) can be identified.

Unit Controls

Fan Contactors: M11- 27, Fan Motor Protectors: MSP1- 14, & Fan Line Reactors: LR1- 3

For any control components not detailed or for unit specific controls, please contact Daikin McQuay Parts with the Control Box Serial Number and Control Box Part/GOI Number.

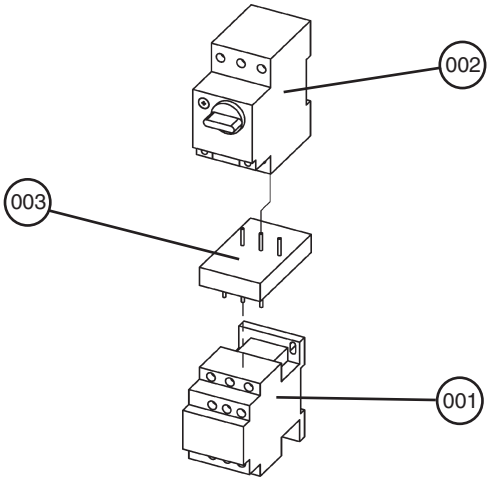

Ref. No.	Sch. Sym.	Part Description	Part Number	Voltage [1]					
				208V	230V	380V	400V	460V	575V
001	M11- 27	Contactor- Fan Motor	349932121	1	1	1	1	1	1
002	MSP1- 14	Motor Service Protector- 1.5 HP Fan Motor	349934051	1	1				
		Motor Service Protector- 1.5 HP Fan Motor	349934049				1	1	
		Motor Service Protector- 2.0 HP Fan Motor	349934052	1	1				
		Motor Service Protector- 2.0 HP Fan Motor	349934050			1	1	1	
		Motor Service Protector- 2.0 HP Fan Motor	349934049						1
003	-	Link- Fan Motor Contactor	349932922	1	1	1	1	1	1
N/S	LR1- 3	Line Reactor- Fan	349964941	1	1				
		Line Reactor- Fan	300042156			1	1	1	
		Line Reactor- Fan	349964952						1

N/S= Not shown on diagram.

[1] Quantities listed are PER fan. Refer to Code 02 to determine the number of fans included in each unit.

Unit Controls

Disconnects: DS1, 2 [1]

Code 18= PC, DC [3]

For any control components not detailed or for unit specific controls, please contact Daikin McQuay Parts with the Control Box Serial Number and Control Box Part/GOI Number.

Sch. Sym.	Part Description	Amps	Component	
			Switch	Handle [2]
DS1, 2	Disconnect Switch	100A	349935125	349935521
	Disconnect Switch	150A	349935126	349935532
	Disconnect Switch	250A	349935226	349935532
	Disconnect Switch	400A	349935325	349935621
	Disconnect Switch	600A	193438002	193437902
	Disconnect Switch	800A	193438201	349961206
	Disconnect Switch	1000A	193438206	349961206

[1] Disconnects listed are the most common sizes offered. Due to the various unit options available, before ordering it is necessary to confirm what amperage Disconnect is installed in the unit, or if this is not known, contact Daikin McQuay Parts with model and serial number information so that the required parts(s) can be identified.

[2] Includes Handle, Mechanism, and Shaft.

[3] For HSCCR units (Code 18= DH) contact Daikin McQuay Parts with model and serial number information so that the required parts(s) can be identified.

Unit Controls

Pump Package Circuit Breaker: CB7

Code 18= PC, DC, MN, WN [1]

For any control components not detailed or for unit specific controls, please contact Daikin McQuay Parts with the Control Box Serial Number and Control Box Part/GOI Number.

Sch. Sym.	Pump HP	Part Description	Part Number	Voltage [2]			
				208V	230V	400V/ 460V	575V
CB7	2	Circuit Breaker	349939621	1	1		
		Circuit Breaker	349939601			1	1
	3	Circuit Breaker	349939622	1	1		
		Circuit Breaker	349939601			1	1
	5	Circuit Breaker	349939624	1	1		
		Circuit Breaker	349939601			1	1
	7.5	Circuit Breaker	349939627	1	1		
		Circuit Breaker	349939602			1	
		Circuit Breaker	349939601				1
	10	Circuit Breaker	349939629	1	1		
		Circuit Breaker	349939603			1	
		Circuit Breaker	349939602				1
	15	Circuit Breaker	349939632	1	1		
		Circuit Breaker	349939606			1	
		Circuit Breaker	349939604				1
	20	Circuit Breaker	349939702	1	1		
		Circuit Breaker	349939608			1	
		Circuit Breaker	349939606				1
	25	Circuit Breaker	349939702	1	1		
		Circuit Breaker	349939609			1	
		Circuit Breaker	349939608				1

[1] For HSCCR units (Code 18= DH) contact Daikin McQuay Parts with model and serial number information so that the required part(s) can be identified.

[2] For 380V units (Code 16= 46) contact Daikin McQuay Parts with model and serial number information so that the required part(s) can be identified.

Unit Controls
Fuses: FU4- FU8, FU16 [1]
Code 18= PC, DC

For any control components not detailed or for unit specific controls, please contact Daikin McQuay Parts with the Control Box Serial Number and Control Box Part/GOI Number.

Sch. Sym.	Part Description	Part Number	Voltage					
			208V	230V	380V	400V	460V	575V
FU4, 5	Fuse- Control Transformer, Primary							
	1.5KVA Transformer	300042980	2					
	1.5KVA Transformer	349937134		2				
	1.5KVA Transformer	049759816			2	2		
	1.5KVA Transformer	049759815					2	
	1.5KVA Transformer	349937127						2
	3.0KVA Transformer	300042153	2	2				
	3.0KVA Transformer	300042980			2	2		
	3.0KVA Transformer	300043312					2	2
FU6	Fuse- Control Transformer, Secondary							
	1.5KVA Transformer	042753122	1	1	1	1	1	1
	3.0KVA Transformer	042753125	1	1	1	1	1	1
FU6A	Fuse- Control Transformer, Secondary [2]	042753122	1	1	1	1	1	1
FU7	Fuse- Evaporator Heater	042753120	1	1	1	1	1	1
FU8	Fuse- Outlet	193466501	1	1	1	1	1	1
FU16	Fuse- Control Transformer, Secondary [2]	042753122	1	1	1	1	1	1

[1] For HSCCR units (Code 18= DH) contact Daikin McQuay Parts with model and serial number information so that the required part(s) can be identified.

[2] FU6A and FU16 are used only when a 3.0KVA T1 transformer is required AND one or more of the following options are also present: Control Box Exhaust Fans, Fan VFDs, OLF 115V outlet.

Refrigeration Circuit
Compressor Layout Diagrams

Unit Sizes 025-070

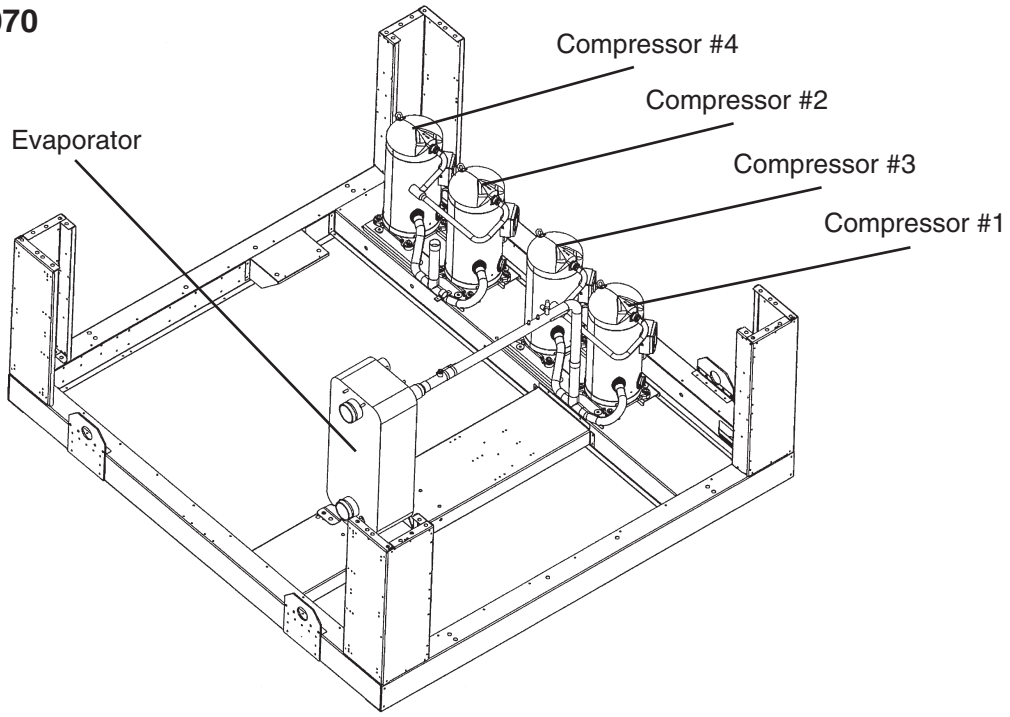

Unit Sizes 075-100

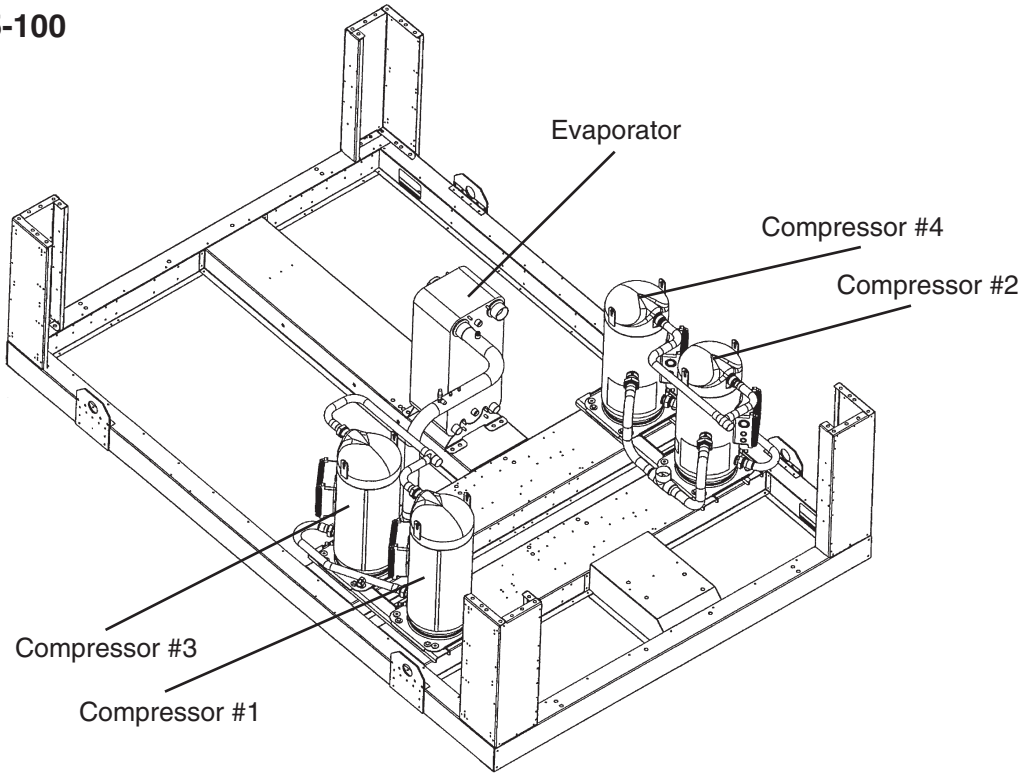

Refrigeration Circuit
Compressor Layout Diagrams, Continued

Unit Sizes 110-130

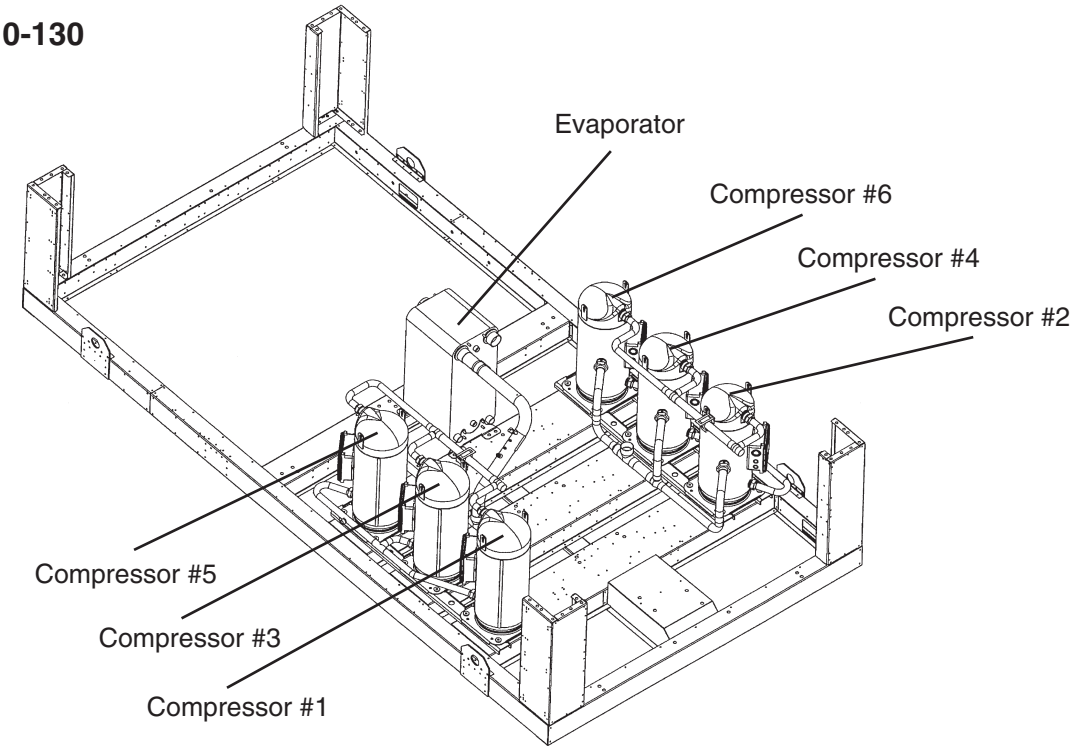

Unit Sizes 140-190

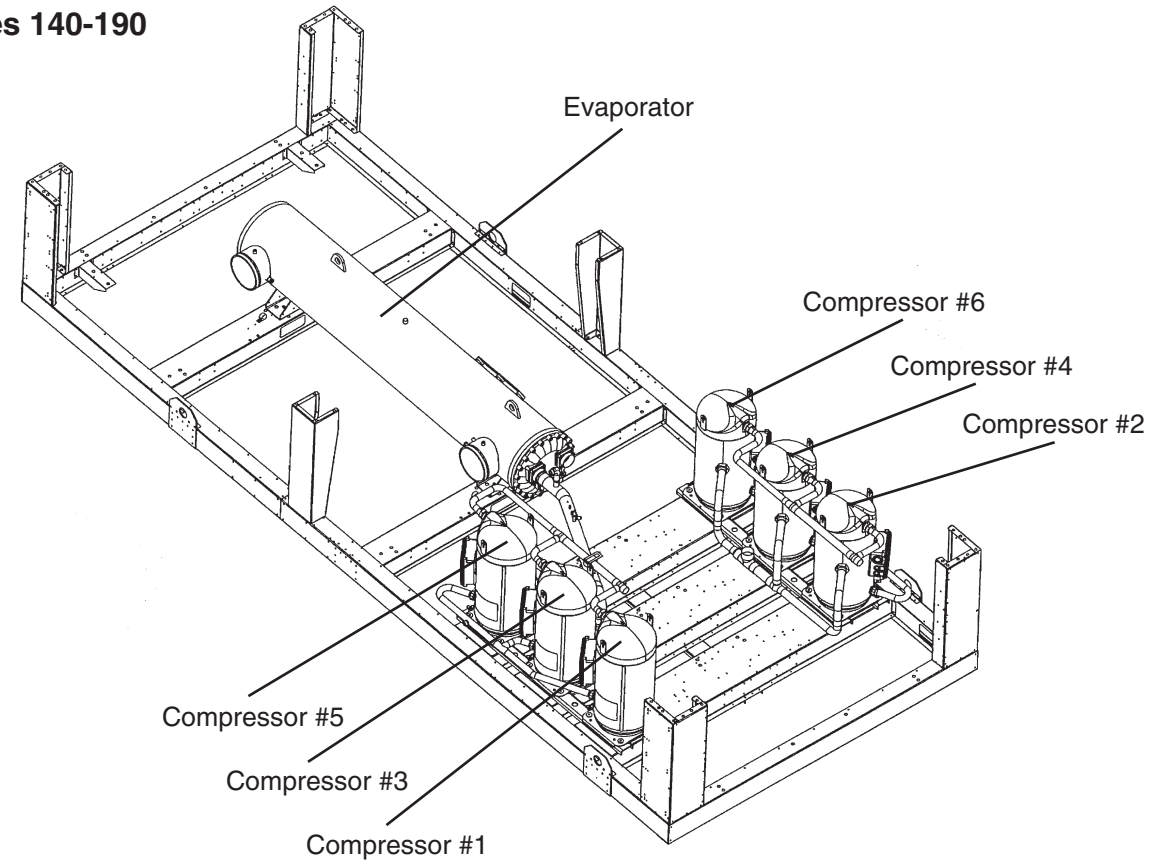

Refrigeration Circuit
Compressors
AGZ 025- 040
Unit Revision 00, 0A (Code 55= 00, 0A)

These Compressors were originally offered as Tandem Compressor Assemblies. Tandem Compressor Assemblies are no longer being offered. The part number listed is for a SINGLE Compressor. When replacing a single Compressor out of a Tandem Assembly, the original piping is reused. When the unit has an unequal Tandem Assembly (two Compressors with different HP ratings), confirm the HP of the required Compressor before ordering.

Ref. No.	Part Description		Part Number	Unit Size											
				025D				030D & 035D				040D			
				208/230V	380V	400/460V	575V	208/230V	380V	400/460V	575V	208/230V	380V	400/460V	575V
1, 3	Compressor- Circuit #1	7.5 HP	300046176	2											
	Compressor- Circuit #1	7.5 HP	[1]		2										
	Compressor- Circuit #1	7.5 HP	300046178			2									
	Compressor- Circuit #1	7.5 HP	300046180				2								
	Compressor- Circuit #1	9 HP	300046077					2							
	Compressor- Circuit #1	9 HP	[1]						2						
	Compressor- Circuit #1	9 HP	300046079							2					
	Compressor- Circuit #1	9 HP	300046081								2				
	Compressor- Circuit #1	10 HP	300046083									2			
	Compressor- Circuit #1	10 HP	[1]										2		
	Compressor- Circuit #1	10 HP	300046085											2	
	Compressor- Circuit #1	10 HP	300046087												2
2, 4	Compressor- Circuit #2	7.5 HP	300046176	2											
	Compressor- Circuit #2	7.5 HP	[1]		2										
	Compressor- Circuit #2	7.5 HP	300046178			2									
	Compressor- Circuit #2	7.5 HP	300046180				2								
	Compressor- Circuit #2	9 HP	300046077					2							
	Compressor- Circuit #2	9 HP	[1]						2						
	Compressor- Circuit #2	9 HP	300046079							2					
	Compressor- Circuit #2	9 HP	300046081								2				
	Compressor- Circuit #2	10 HP	300046083									2			
	Compressor- Circuit #2	10 HP	[1]										2		
	Compressor- Circuit #2	10 HP	300046085											2	
	Compressor- Circuit #2	10 HP	300046087												2
N/S	Crankcase Heater- 90W, 120V		070902801	4	4	4	4	4	4	4	4	4	4	4	4

N/S= Not Shown on Diagram.

[1] For 380V Compressors, Contact McQuay Parts with model and serial number information so that the correct compressor(s) can be identified.

Refrigeration Circuit
Compressors
AGZ 045- 065
Unit Revision 00, 0A (Code 55= 00, 0A)

These Compressors were originally offered as Tandem Compressor Assemblies. Tandem Compressor Assemblies are no longer being offered. The part number listed is for a SINGLE Compressor. When replacing a single Compressor out of a Tandem Assembly, the original piping is reused. When the unit has an unequal Tandem Assembly (two Compressors with different HP ratings), confirm the HP of the required Compressor before ordering.

Ref. No.	Part Description		Part Number	Unit Size															
				045D				050D				055D				060D & 065D			
				208/230V	380V	400/460V	575V	208/230V	380V	400/460V	575V	208/230V	380V	400/460V	575V	208/230V	380V	400/460V	575V
1, 3	Compressor- Circuit #1	12 HP	300046089	2															
	Compressor- Circuit #1	12 HP	[1]		2														
	Compressor- Circuit #1	12 HP	300046091			2													
	Compressor- Circuit #1	12 HP	300046093				2												
	Compressor- Circuit #1	13 HP	300046095					2				2							
	Compressor- Circuit #1	13 HP	[1]						2				2						
	Compressor- Circuit #1	13 HP	300046097							2				2					
	Compressor- Circuit #1	13 HP	300046099								2				2				
	Compressor- Circuit #1	15 HP	300046105													2			
	Compressor- Circuit #1	15 HP	[1]														2		
	Compressor- Circuit #1	15 HP	300046108															2	
	Compressor- Circuit #1	15 HP	300046110																2
2, 4	Compressor- Circuit #2	12 HP	300046089	2															
	Compressor- Circuit #2	12 HP	[1]		2														
	Compressor- Circuit #2	12 HP	300046091			2													
	Compressor- Circuit #2	12 HP	300046093				2												
	Compressor- Circuit #2	13 HP	300046095					2											
	Compressor- Circuit #2	13 HP	[1]						2										
	Compressor- Circuit #2	13 HP	300046097							2									
	Compressor- Circuit #2	13 HP	300046099								2								
	Compressor- Circuit #2	15 HP	300046105									2				2			
	Compressor- Circuit #2	15 HP	[1]										2				2		
	Compressor- Circuit #2	15 HP	300046108											2				2	
	Compressor- Circuit #2	15 HP	300046110												2				2
N/S	Crankcase Heater- 90W, 120V		070902801	4	4	4	4	4	4	4	4	4	4	4	4	4	4	4	4
N/S	Compressor Motor Protection Module		300045656					4	4	4	4	4	4	4	4	4	4	4	4

N/S= Not Shown on Diagram.
[1] For 380V Compressors, Contact McQuay Parts with model and serial number information so that the correct compressor(s) can be identified.

Refrigeration Circuit
Compressors
AGZ 070- 080
Unit Revision 00 (Code 55= 00)

These Compressors were originally offered as Tandem Compressor Assemblies. Tandem Compressor Assemblies are no longer being offered. The part number listed is for a SINGLE Compressor. When replacing a single Compressor out of a Tandem Assembly, the original piping is reused. When the unit has an unequal Tandem Assembly (two Compressors with different HP ratings), confirm the HP of the required Compressor before ordering.

Ref. No.	Part Description		Part Number	Unit Size											
				070D				075D				080D			
				208/230V	380V	400/460V	575V	208/230V	380V	400/460V	575V	208/230V	380V	400/460V	575V
1	Compressor- Circuit 1	20 HP	300046114	1				1				1			
	Compressor- Circuit 1	20 HP	[1]		1				1				1		
	Compressor- Circuit 1	20 HP	300046115			1				1				1	
	Compressor- Circuit 1	20 HP	300046117				1				1				1
2	Compressor- Circuit 2	20 HP	300046114	1				1							
	Compressor- Circuit 2	20 HP	[1]		1				1						
	Compressor- Circuit 2	20 HP	300046115			1				1					
	Compressor- Circuit 2	20 HP	300046117				1				1				
	Compressor- Circuit 2	25 HP	300046125									1			
	Compressor- Circuit 2	25 HP	[1]										1		
	Compressor- Circuit 2	25 HP	300046127											1	
	Compressor- Circuit 2	25 HP	300046128												1
3	Compressor- Circuit 1	15 HP	300046105	1											
	Compressor- Circuit 1	15 HP	[1]		1										
	Compressor- Circuit 1	15 HP	300046108			1									
	Compressor- Circuit 1	15 HP	300046110				1								
	Compressor- Circuit 1	20 HP	300046114					1				1			
	Compressor- Circuit 1	20 HP	[1]						1				1		
	Compressor- Circuit 1	20 HP	300046115							1				1	
	Compressor- Circuit 1	20 HP	300046117								1				1
4	Compressor- Circuit 2	15 HP	300046105	1											
	Compressor- Circuit 2	15 HP	[1]		1										
	Compressor- Circuit 2	15 HP	300046108			1									
	Compressor- Circuit 2	15 HP	300046110				1								
	Compressor- Circuit 2	20 HP	300046114					1							
	Compressor- Circuit 2	20 HP	[1]						1						
	Compressor- Circuit 2	20 HP	300046115							1					
	Compressor- Circuit 2	20 HP	300046117								1				
	Compressor- Circuit 2	25 HP	300046125									1			
	Compressor- Circuit 2	25 HP	[1]										1		
	Compressor- Circuit 2	25 HP	300046127											1	
	Compressor- Circuit 2	25 HP	300046128												1
N/S	Crankcase Heater- 90W, 120V		070902801	2 [2]	2 [2]	2 [2]	2 [2]								
N/S	Crankcase Heater- 120W, 120V		333613201	2 [3]	2 [3]	2 [3]	2 [3]	4	4	4	4	2 [4]	2 [4]	2 [4]	2 [4]
N/S	Crankcase Heater- 140W, 120V		333613202									2 [5]	2 [5]	2 [5]	2 [5]
N/S	Compressor Motor Protection Module [2]		300045656	2 [2]	2 [2]	2 [2]	2 [2]								
N/S	Compressor Motor Protection Module [3]		300042215	2 [3]	2 [3]	2 [3]	2 [3]	4	4	4	4	4	4	4	4

N/S= Not Shown on Diagram.
[1] Contact McQuay Parts with model and serial number information so that the correct compressor(s) can be identified.
[2] Used for the 15 HP compressor: Ref #3 & 4. 1pc. PER compressor.
[3] Used for the 20 HP compressor: Ref #1 & 2. 1pc. PER compressor.
[4] Used for Circuit 1 compressors. 1pc. PER compressor.
[5] Used for Circuit 2 compressors. 1pc. PER compressor.

Refrigeration Circuit
Compressors
AGZ 070- 080
Unit Revision 0A (Code 55= 0A)

These Compressors were originally offered as Tandem Compressor Assemblies. Tandem Compressor Assemblies are no longer being offered. The part number listed is for a SINGLE Compressor. When replacing a single Compressor out of a Tandem Assembly, the original piping is reused. When the unit has an unequal Tandem Assembly (two Compressors with different HP ratings), confirm the HP of the required Compressor before ordering.

Ref. No.	Part Description		Part Number	Unit Size											
				070D				075D				080D			
				208/230V	380V	400/460V	575V	208/230V	380V	400/460V	575V	208/230V	380V	400/460V	575V
1	Compressor- Circuit 1	20 HP	500559901	1				1				1			
	Compressor- Circuit 1	20 HP	[1]		1				1				1		
	Compressor- Circuit 1	20 HP	500559902			1				1				1	
	Compressor- Circuit 1	20 HP	500559904				1				1				1
2	Compressor- Circuit 2	20 HP	500559901	1				1							
	Compressor- Circuit 2	20 HP	[1]		1				1						
	Compressor- Circuit 2	20 HP	500559902			1				1					
	Compressor- Circuit 2	20 HP	500559904				1				1				
	Compressor- Circuit 2	25 HP	500560101									1			
	Compressor- Circuit 2	25 HP	[1]										1		
	Compressor- Circuit 2	25 HP	500560102											1	
	Compressor- Circuit 2	25 HP	500560104												1
3	Compressor- Circuit 1	15 HP	300046105	1											
	Compressor- Circuit 1	15 HP	[1]		1										
	Compressor- Circuit 1	15 HP	300046108			1									
	Compressor- Circuit 1	15 HP	300046110				1								
	Compressor- Circuit 1	20 HP	500559901					1				1			
	Compressor- Circuit 1	20 HP	[1]						1				1		
	Compressor- Circuit 1	20 HP	500559902							1				1	
	Compressor- Circuit 1	20 HP	500559904								1				1
4	Compressor- Circuit 2	15 HP	300046105	1											
	Compressor- Circuit 2	15 HP	[1]		1										
	Compressor- Circuit 2	15 HP	300046108			1									
	Compressor- Circuit 2	15 HP	300046110				1								
	Compressor- Circuit 2	20 HP	500559901					1							
	Compressor- Circuit 2	20 HP	[1]						1						
	Compressor- Circuit 2	20 HP	500559902							1					
	Compressor- Circuit 2	20 HP	500559904								1				
	Compressor- Circuit 2	25 HP	500560101									1			
	Compressor- Circuit 2	25 HP	[1]										1		
	Compressor- Circuit 2	25 HP	500560102											1	
	Compressor- Circuit 2	25 HP	500560104												1
N/S	Crankcase Heater- 90W, 120V		070902801	2 [2]	2 [2]	2 [2]	2 [2]								
N/S	Crankcase Heater- 120W, 120V		333613201	2 [3]	2 [3]	2 [3]	2 [3]	4	4	4	4	4	4	4	4
N/S	Compressor Motor Protection Module		300045656	2 [2]	2 [2]	2 [2]	2 [2]								
N/S	Compressor Motor Protection Module		300050986	2 [2]	2 [2]	2 [2]	2 [2]	4	4	4	4	4	4	4	4

N/S= Not Shown on Diagram.
[1] Contact McQuay Parts with model and serial number information so that the correct compressor(s) can be identified.
[2] Used for the 15 HP compressor: Ref #3 & 4. 1pc. PER compressor.
[3] Used for the 20 HP compressor: Ref #1 & 2. 1pc. PER compressor.

Refrigeration Circuit
Compressors
AGZ 090- 100
Unit Revision 00 (Code 55= 00)

These Compressors were originally offered as Tandem Compressor Assemblies. Tandem Compressor Assemblies are no longer being offered. The part number listed is for a SINGLE Compressor. When replacing a single Compressor out of a Tandem Assembly, the original piping is reused. When the unit has an unequal Tandem Assembly (two Compressors with different HP ratings), confirm the HP of the required Compressor before ordering.

Ref. No.	Part Description		Part Number	Unit Size							
				090D				100D			
				208/230V	380V	400/460V	575V	208/230V	380V	400/460V	575V
1	Compressor- Circuit 1	25 HP	300046125	1				1			
	Compressor- Circuit 1	25 HP	[1]		1				1		
	Compressor- Circuit 1	25 HP	300046127			1				1	
	Compressor- Circuit 1	25 HP	300046128				1				1
2	Compressor- Circuit 2	25 HP	300046125	1							
	Compressor- Circuit 2	25 HP	[1]		1						
	Compressor- Circuit 2	25 HP	300046127			1					
	Compressor- Circuit 2	25 HP	300046128				1				
	Compressor- Circuit 2	30 HP	500563901					1			
	Compressor- Circuit 2	30 HP	[1]						1		
	Compressor- Circuit 2	30 HP	500563902							1	
	Compressor- Circuit 2	30 HP	500563904								1
3	Compressor- Circuit 1	25 HP	300046125	1				1			
	Compressor- Circuit 1	25 HP	[1]		1				1		
	Compressor- Circuit 1	25 HP	300046127			1				1	
	Compressor- Circuit 1	25 HP	300046128				1				1
4	Compressor- Circuit 2	25 HP	300046125	1							
	Compressor- Circuit 2	25 HP	[1]		1						
	Compressor- Circuit 2	25 HP	300046127			1					
	Compressor- Circuit 2	25 HP	300046128				1				
	Compressor- Circuit 2	30 HP	500563901					1			
	Compressor- Circuit 2	30 HP	[1]						1		
	Compressor- Circuit 2	30 HP	500563902							1	
	Compressor- Circuit 2	30 HP	500563904								1
N/S	Crankcase Heater- 140W, 120V		333613202	4	4	4	4	4	4	4	4
N/S	Compr Motor Protection Module (25HP)		300042215	4	4	4	4	4	4	4	4
N/S	Compr Motor Protection Module (30HP)		[2]	4	4	4	4	4	4	4	4

N/S= Not Shown on Diagram.

[1] Contact McQuay Parts with model and serial number information so that the correct compressor(s) can be identified.

[2] The 30 HP Compressors listed have a Core Sense Mtr Prot Mod, part number 300050986. Earlier 30 HP compressors used Motor Protection Module INT369R, part number 300042215. The modules are not interchangeable. If unable to determine the correct module, contact Daikin McQuay Parts with the unit GO and serial number.

Refrigeration Circuit
Compressors
AGZ 090- 100
Unit Revision 0A (Code 55= 0A)

These Compressors were originally offered as Tandem Compressor Assemblies. Tandem Compressor Assemblies are no longer being offered. The part number listed is for a SINGLE Compressor. When replacing a single Compressor out of a Tandem Assembly, the original piping is reused. When the unit has an unequal Tandem Assembly (two Compressors with different HP ratings), confirm the HP of the required Compressor before ordering.

Ref. No.	Part Description		Part Number	Unit Size							
				090D				100D			
				208/230V	380V	400/460V	575V	208/230V	380V	400/460V	575V
1	Compressor- Circuit 1	25 HP	500560101	1				1			
	Compressor- Circuit 1	25 HP	[1]		1				1		
	Compressor- Circuit 1	25 HP	500560102			1				1	
	Compressor- Circuit 1	25 HP	500560104				1				1
2	Compressor- Circuit 2	25 HP	500560101	1							
	Compressor- Circuit 2	25 HP	[1]		1						
	Compressor- Circuit 2	25 HP	500560102			1					
	Compressor- Circuit 2	25 HP	500560104				1				
	Compressor- Circuit 2	30 HP	500563901					1			
	Compressor- Circuit 2	30 HP	[1]						1		
	Compressor- Circuit 2	30 HP	500563902							1	
	Compressor- Circuit 2	30 HP	500563904								1
3	Compressor- Circuit 1	25 HP	500560101	1				1			
	Compressor- Circuit 1	25 HP	[1]		1				1		
	Compressor- Circuit 1	25 HP	500560102			1				1	
	Compressor- Circuit 1	25 HP	500560104				1				1
4	Compressor- Circuit 2	25 HP	500560101	1							
	Compressor- Circuit 2	25 HP	[1]		1						
	Compressor- Circuit 2	25 HP	500560102			1					
	Compressor- Circuit 2	25 HP	500560104				1				
	Compressor- Circuit 2	30 HP	500563901					1			
	Compressor- Circuit 2	30 HP	[1]						1		
	Compressor- Circuit 2	30 HP	500563902							1	
	Compressor- Circuit 2	30 HP	500563904								1
N/S	Crankcase Heater- 120W, 120V		333613201	4	4	4	4	2 [4]	2 [4]	2 [4]	2 [4]
N/S	Crankcase Heater- 140W, 120V		333613202					2 [5]	2 [5]	2 [5]	2 [5]
N/S	Compr Motor Protection Module for 25HP		300050986	4	4	4	4	4	4	4	4
N/S	Compr Motor Protection Module for 30HP		[2]	4	4	4	4	4	4	4	4

N/S= Not Shown on Diagram.

[1] Contact McQuay Parts with model and serial number information so that the correct compressor(s) can be identified.

[2] The 30 HP Compressors listed have a Core Sense Mtr Prot Mod, part number 300050986. Earlier 30 HP compressors used Motor Protection Module INT369R, part number 300042215. The modules are not interchangeable. If unable to determine the correct module, contact Daikin McQuay Parts with the unit GO and serial number.

[4] Used for Circuit 1 compressors. 1pc. PER compressor.

[5] Used for Circuit 2 compressors. 1pc. PER compressor.

Refrigeration Circuit
Compressors
AGZ 110- 130
Unit Revision 00 (Code 55= 00)

Ref. No.	Part Description		Part Number	Unit Size											
				110D				125D				130D			
				208/230V	380V	400/460V	575V	208/230V	380V	400/460V	575V	208/230V	380V	400/460V	575V
1,3,5	Compressor- Circuit 1	20 HP	300046114	3				3							
	Compressor- Circuit 1	20 HP	[1]		3				3						
	Compressor- Circuit 1	20 HP	300046115			3				3					
	Compressor- Circuit 1	20 HP	300046117				3				3				
	Compressor- Circuit 1	25 HP	300046125									3			
	Compressor- Circuit 1	25 HP	[1]										3		
	Compressor- Circuit 1	25 HP	300046127											3	
	Compressor- Circuit 1	25 HP	300046128												3
2,4,6	Compressor- Circuit 2	20 HP	300046114	3											
	Compressor- Circuit 2	20 HP	[1]		3										
	Compressor- Circuit 2	20 HP	300046115			3									
	Compressor- Circuit 2	20 HP	300046117				3								
	Compressor- Circuit 2	25 HP	300046125					3				3			
	Compressor- Circuit 2	25 HP	[1]						3				3		
	Compressor- Circuit 2	25 HP	300046127							3				3	
	Compressor- Circuit 2	25 HP	300046128								3				3
N/S	Crankcase Heater- 120W, 120V		333613201	6	6	6	6	3[4]	3[4]	3[4]	3[4]				
N/S	Crankcase Heater- 140W, 120V		333613202					3[5]	3[5]	3[5]	3[5]	6	6	6	6
N/S	Compressor Motor Protection Module		300042215	6	6	6	6	6	6	6	6	6	6	6	6

N/S= Not Shown on Diagram.
[1] Contact McQuay Parts with model and serial number information so that the correct compressor(s) can be identified.
[4] Used for Circuit 1 compressors. 1pc. PER compressor.
[5] Used for Circuit 2 compressors. 1pc. PER compressor.

Refrigeration Circuit
Compressors
AGZ 110- 130
Unit Revision 0A (Code 55= 0A)

Ref. No.	Part Description		Part Number	Unit Size											
				110D				125D				130D			
				208/230V	380V	400/460V	575V	208/230V	380V	400/460V	575V	208/230V	380V	400/460V	575V
1,3,5	Compressor- Circuit 1	20 HP	500559901	3				3							
	Compressor- Circuit 1	20 HP	[1]		3				3						
	Compressor- Circuit 1	20 HP	500559902			3				3					
	Compressor- Circuit 1	20 HP	500559904				3				3				
	Compressor- Circuit 1	25 HP	500560101									3			
	Compressor- Circuit 1	25 HP	[1]										3		
	Compressor- Circuit 1	25 HP	500560102											3	
	Compressor- Circuit 1	25 HP	500560104												3
2,4,6	Compressor- Circuit 2	20 HP	500559901	3											
	Compressor- Circuit 2	20 HP	[1]		3										
	Compressor- Circuit 2	20 HP	500559902			3									
	Compressor- Circuit 2	20 HP	500559904				3								
	Compressor- Circuit 2	25 HP	500560101					3				3			
	Compressor- Circuit 2	25 HP	[1]						3				3		
	Compressor- Circuit 2	25 HP	500560102							3				3	
	Compressor- Circuit 2	25 HP	500560104								3				3
N/S	Crankcase Heater- 120W, 120V		333613201	6	6	6	6	6	6	6	6	6	6	6	6
N/S	Compressor Motor Protection Module		300050986	6	6	6	6	6	6	6	6	6	6	6	6

N/S= Not Shown on Diagram.

[1] Contact McQuay Parts with model and serial number information so that the correct compressor(s) can be identified.

Refrigeration Circuit
Compressors
AGZ 140- 160
Unit Revision 00 (Code 55= 00)

Ref. No.	Part Description		Part Number	Unit Size							
				140D				160D			
				208/230V	380V	400/460V	575V	208/230V	380V	400/460V	575V
1,3,5	Compressor- Circuit 1	25 HP	300046125	3				3			
	Compressor- Circuit 1	25 HP	[1]		3				3		
	Compressor- Circuit 1	25 HP	300046127			3				3	
	Compressor- Circuit 1	25 HP	300046128				3				3
2,4,6	Compressor- Circuit 2	25 HP	300046125	3							
	Compressor- Circuit 2	25 HP	[1]		3						
	Compressor- Circuit 2	25 HP	300046127			3					
	Compressor- Circuit 2	25 HP	300046128				3				
	Compressor- Circuit 2	30 HP	500563901					3			
	Compressor- Circuit 2	30 HP	[1]						3		
	Compressor- Circuit 2	30 HP	500563902							3	
	Compressor- Circuit 2	30 HP	500563904								3
N/S	Crankcase Heater- 140W, 120V		333613202	6	6	6	6	6	6	6	6
N/S	Compr Motor Protection Module for 25HP		300042215	6	6	6	6	6	6	6	6
N/S	Compr Motor Protection Module for 30HP		[2]	6	6	6	6	6	6	6	6

N/S= Not Shown on Diagram.

[1] Contact McQuay Parts with model and serial number information so that the correct compressor(s) can be identified.

[2] The 30 HP Compressors listed have a Core Sense Mtr Prot Mod, part number 300050986. Earlier 30 HP compressors used Motor Protection Module INT369R, part number 300042215. The modules are not interchangeable. If unable to determine the correct module, contact Daikin McQuay Parts with the unit GO and serial number.

Refrigeration Circuit
Compressors
AGZ 140- 160
Unit Revision 0A (Code 55= 0A)

Ref. No.	Part Description		Part Number	Unit Size 140D 208/230V	140D 380V	140D 400/460V	140D 575V	160D 208/230V	160D 380V	160D 400/460V	160D 575V
1,3,5	Compressor- Circuit 1	25 HP	500560101	3				3			
	Compressor- Circuit 1	25 HP	[1]		3				3		
	Compressor- Circuit 1	25 HP	500560102			3				3	
	Compressor- Circuit 1	25 HP	500560104				3				3
2,4,6	Compressor- Circuit 2	25 HP	500560101	3							
	Compressor- Circuit 2	25 HP	[1]		3						
	Compressor- Circuit 2	25 HP	500560102			3					
	Compressor- Circuit 2	25 HP	500560104				3				
	Compressor- Circuit 2	30 HP	500563901					3			
	Compressor- Circuit 2	30 HP	[1]						3		
	Compressor- Circuit 2	30 HP	500563902							3	
	Compressor- Circuit 2	30 HP	500563904								3
N/S	Crankcase Heater- 120W, 120V		333613201	6	6	6	6	3 [4]	3 [4]	3 [4]	3 [4]
N/S	Crankcase Heater- 140W, 120V		333613202					3 [5]	3 [5]	3 [5]	3 [5]
N/S	Compr Motor Protection Module for 25HP		300050986	6	6	6	6	6	6	6	6
N/S	Compr Motor Protection Module for 30HP		[2]	6	6	6	6	6	6	6	6

N/S= Not Shown on Diagram.

[1] Contact McQuay Parts with model and serial number information so that the correct compressor(s) can be identified.

[2] The 30 HP Compressors listed have a Core Sense Mtr Prot Mod, part number 300050986. Earlier 30 HP compressors used Motor Protection Module INT369R, part number 300042215. The modules are not interchangeable. If unable to determine the correct module, contact Daikin McQuay Parts with the unit GO and serial number.

[4] Used for Circuit 1 compressors. 1pc. PER compressor.

[5] Used for Circuit 2 compressors. 1pc. PER compressor.

Refrigeration Circuit
Compressors
AGZ 180- 190
Unit Revision 00, 0A (Code 55= 00, 0A)

Ref. No.	Part Description		Part Number	Unit Size							
				180D				190D			
				208/230V	380V	400/460V	575V	208/230V	380V	400/460V	575V
1,3,5	Compressor- Circuit 1	30 HP	500563901	3				3			
	Compressor- Circuit 1	30 HP	[1]		3				3		
	Compressor- Circuit 1	30 HP	500563902			3				3	
	Compressor- Circuit 1	30 HP	500563904				3				3
2,4,6	Compressor- Circuit 2	30 HP	500563901	3				3			
	Compressor- Circuit 2	30 HP	[1]		3				3		
	Compressor- Circuit 2	30 HP	500563902			3				3	
	Compressor- Circuit 2	30 HP	500563904				3				3
N/S	Crankcase Heater- 140W, 120V		333613202	6	6	6	6	6	6	6	6
N/S	Compressor Motor Protection Module		[2]	6	6	6	6	6	6	6	6

N/S= Not Shown on Diagram.

[1] Contact McQuay Parts with model and serial number information so that the correct compressor(s) can be identified.

[2] The 30 HP Compressors listed have a Core Sense Mtr Prot Mod, part number 300050986. Earlier 30 HP compressors used Motor Protection Module INT369R, part number 300042215. The modules are not interchangeable. If unable to determine the correct module, contact Daikin McQuay Parts with the unit GO and serial number.

Refrigeration Circuit
Compressor Trio Piping AGZ 110- 190

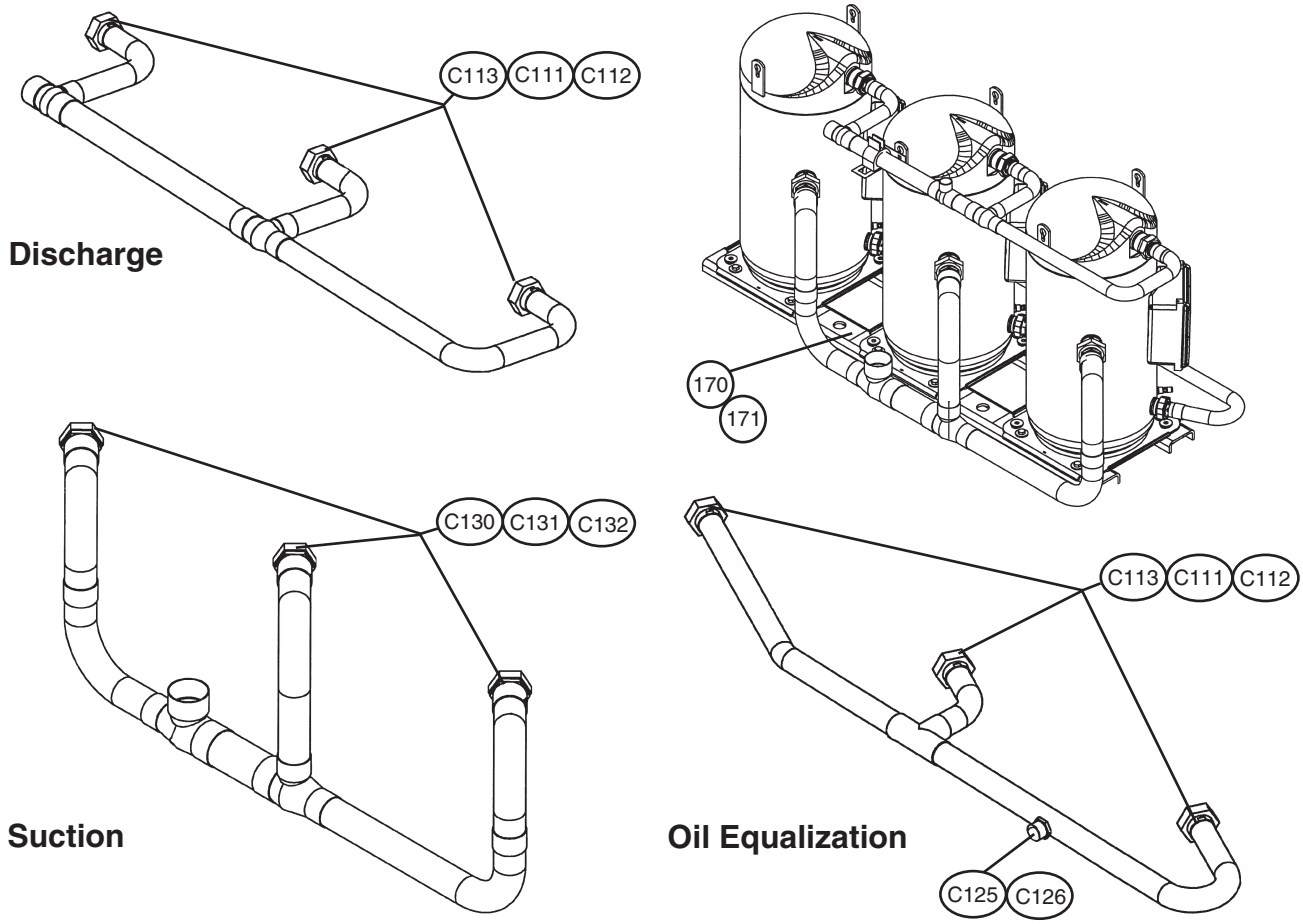

Ref.#	Description	Part Number	Unit Sizes	
	Discharge Piping		**110- 160**	**180, 190**
C111	Rotolock Nuts, 1.75”	330520602	3 per ckt.	3 per ckt.
C112	Rotolock Fitting, 1.375”	330520705	3 per ckt.	3 per ckt.
C113	Seal Ring, 1.50”	736017605	3 per ckt.	3 per ckt.
	Oil Equalization Piping			
C111	Rotolock Nuts, 1.75”	330520602	3 per ckt.	3 per ckt.
C112	Rotolock Fitting, 1.375”	330520705	3 per ckt.	3 per ckt.
C113	Seal Ring, 1.50”	736017605	3 per ckt.	3 per ckt.
C125	Sight Glass Saddle Adapter, 1.375”	330508704	1 per ckt.	1 per ckt.
C126	Sight Glass 330	330508701	1 per ckt.	1 per ckt.
	Suction Piping			
C130	Rotolock Fitting, 1.625”	330520701	3 per ckt.	3 per ckt.
C131	Rotolock Nuts, 2.25”	330520601	3 per ckt.	-
C132	Rotolock Teflon Seal, 1.625”	330503001	3 per ckt.	-
170	Rail, Trio Compressors	330495701	2 per ckt.	2 per ckt.
171	Mounting Spacer (under rail), Kit of 4	330502901	2 per ckt.	2 per ckt.

Refrigeration Circuit
AGZ 025- 130 Evaporator

Plate to Plate Heat Exchanger				
Unit Sizes	**Head Connection**	**Single Insulation**	**Double Insulation**	**Qty.**
025- 030	Evaporator, Left-Hand	332871601	332871651	1
035	Evaporator, Left-Hand	332871602	332871652	1
040	Evaporator, Left-Hand	332871603	332871653	1
045	Evaporator, Left-Hand	332871604	332871654	1
050	Evaporator, Left-Hand	332871605	332871655	1
055	Evaporator, Left-Hand	332871606	332871656	1
060	Evaporator, Left-Hand	332871610	332871660	1
065- 070	Evaporator, Left-Hand	332871611	332871661	1
075	Evaporator, Universal	332871612	332871662	1
080	Evaporator, Universal	332871613	332871663	1
090	Evaporator, Universal	332871614	332871664	1
100	Evaporator, Universal	332871615	332871665	1
110	Evaporator, Universal	332871616	332871666	1
125	Evaporator, Universal	332871617	332871667	1
130	Evaporator, Universal	332871618	332871668	1

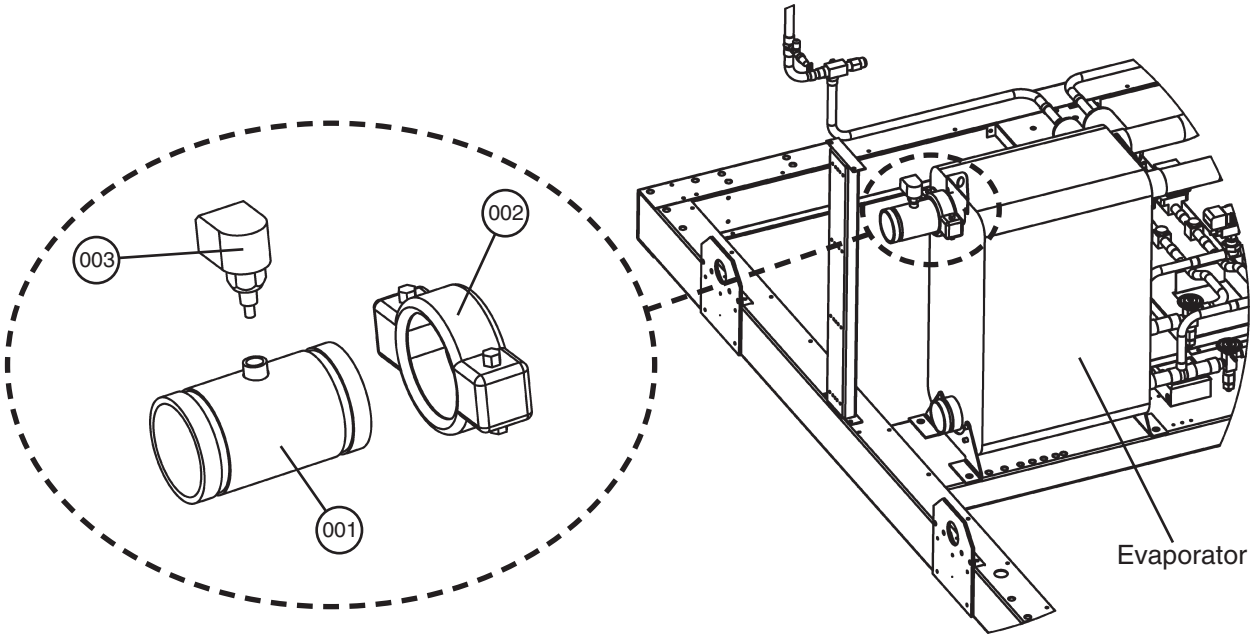

Ref.#	Description	Part Number	025- 055	060- 130
001	Pipe Assembly	331598002	1	
001	Pipe Assembly	331598001		1
002	Clamp- Victaulic, 2.88” OD	331597902	1	
002	Clamp- Victaulic, 3.50” OD	331597903		1
003	Flow Sensor	331796201 [1]	1	1
N/S	Cable- Flow Sensor (10 Meter)	330571403 [1]	1	1

N/S = Not Shown on diagram.
[1] Included in Water Flow Switch Kit- Electronic. See Optional Equipment section for Kit p/ns.

Refrigeration Circuit
AGZ 025- 130 Evaporator Insulation

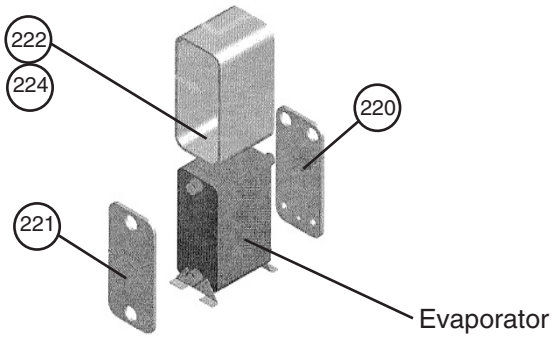

Unit Size	Ref.#	Description	Part Number	Single Insulation	Double Insulation
025- 055	220	Insulation, Refrigerant Side- 11.22 x 20.67”	332776602	1	2
025- 055	221	Insulation, Water Side- 11.22 x 20.67”	332776601	1	2
025- 030	222	Insulation, Wrap- 58.0 x 7.3”	332776603	1	1
025- 030	224	Insulation, Wrap- 63.5 x 10.3”	047662050 [1]		5 sq. ft.
035	222	Insulation, Wrap- 58.0 x 8.0”	332776604	1	1
035	224	Insulation, Wrap- 63.5 x 11.0”	047662050 [1]		5 sq. ft.
040	222	Insulation, Wrap- 58.0 x 8.7”	332776605	1	1
040	224	Insulation, Wrap- 63.5 x 11.7”	047662050 [1]		6 sq. ft.
045	222	Insulation, Wrap- 58.0 x 10.0”	332776606	1	1
045	224	Insulation, Wrap- 63.5 x 13.0”	047662050 [1]		6 sq. ft.
050	222	Insulation, Wrap- 58.0 x 11.4”	332776607	1	1
050	224	Insulation, Wrap- 63.5 x 14.4”	047662050 [1]		7 sq. ft.
055	222	Insulation, Wrap- 58.0 x 12.1”	332776608	1	1
055	224	Insulation, Wrap- 63.5 x 15.1”	047662050 [1]		7 sq. ft.
060- 130	220	Insulation, Refrigerant Side, 14.26 x 30.67”	332776702	1	2
060- 130	221	Insulation, Water Side, 14.26 x 30.67”	332776701	1	2
060	222	Insulation, Wrap- 83.5 x 7.7”	332776703	1	1
060	224	Insulation, Wrap- 86.0 x 10.7”	047662050 [1]		7 sq. ft.
065- 070	222	Insulation, Wrap, 83.5 x 8.9”	332776704	1	1
065-070	224	Insulation, Wrap- 86.0 x 11.9”	047662050 [1]		8 sq. ft.
075	222	Insulation, Wrap, 83.5 x 10.1”	332776705	1	1
075	224	Insulation, Wrap- 86.0 x 13.1”	047662050 [1]		8 sq. ft.
080	222	Insulation, Wrap- 83.5 x 11.4”	332776706	1	1
080	224	Insulation, Wrap- 86.0 x 14.4”	047662050 [1]		9 sq. ft.
090	222	Insulation, Wrap, 83.5 x 12.2”	332776707	1	1
090	224	Insulation, Wrap- 86.0 x 15.2”	047662050 [1]		10 sq. ft.
100	222	Insulation, Wrap- 83.5 x 14.2”	332776708	1	1
100	224	Insulation, Wrap- 86.0 x 17.2”	047662050 [1]		11 sq. ft.
110	222	Insulation, Wrap, 83.5 x 15.1”	332776709	1	1
110	224	Insulation, Wrap- 86.0 x 18.1”	047662050 [1]		11 sq. ft.
125	222	Insulation, Wrap, 83.5 x 17.1”	332776710	1	1
125	224	Insulation, Wrap- 86.0 x 20.1”	047662050 [1]		12 sq. ft.
130	222	Insulation, Wrap, 83.5 x 19.2”	332776711	1	1
130	224	Insulation, Wrap- 86.0 x 22.2”	047662050 [1]		14 sq. ft.
025- 130	N/S	Insulation Tape (sold by the foot)	330461101	Varies	Varies

[1] Insulation p/n 047662050 is sold by the square foot.

Refrigeration Circuit
AGZ 140- 190 Evaporator

Top View

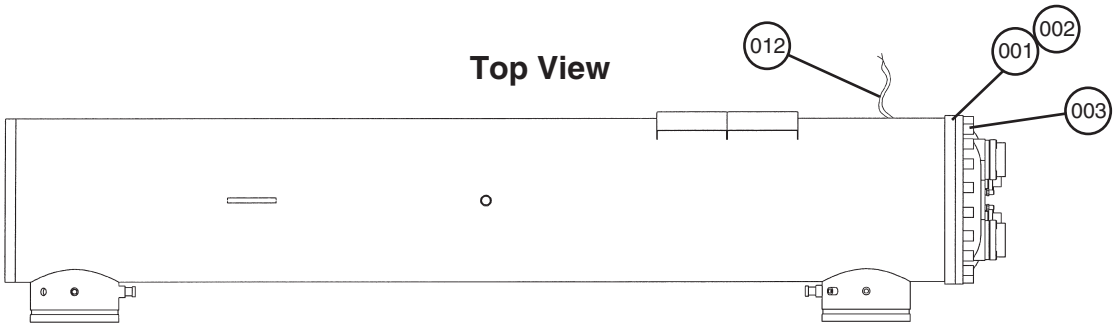

Connection End View

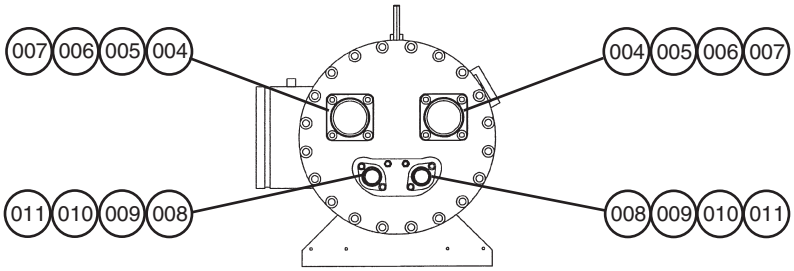

Shell & Tube Evaporator

Unit Sizes	Head Connection	Single Insulation	Double Insulation	Quantity
140,160	Left-Hand	332871630	332871680	1
140,160	Right-Hand	332871640	332871690	1
180	Left-Hand	332871631	332871681	1
180	Right-Hand	332871641	332871691	1
190	Left-Hand	332871632	332871682	1
190	Right-Hand	332871642	332871692	1

Shell & Tube Evaporator Components

Ref. #	Description	Part Number	Quantity
001	Header	E44043570	1
002	Gasket- Header	E44133401	1
003	Bolts- Header	E16157000	20
004	Ferrule- Liquid Side	E44070021	2
005	Flange- Liquid Side	E44060006	2
006	O-Ring- Liquid Side	E44134143	2
007	Bolts- Liquid Side	300046543	8
008	Ferrule- Suction Side	E44070017	2
009	Flange- Suction Side	E44060010	2
010	O-Ring- Suction Side	E44136325	2
011	Bolts- Suction Side	E12125450	8
N/S	Gasket- Distributor	E44133402	2
N/S	O-Ring- Tube Sheet	E0041400	1
N/S	Heater	300042206	1
012	Thermostat	E4419014T	1
N/S	Flow Sensor	331796201	1
N/S	Insulation	047662050 [1]	45 sq. ft.

N/S = Not Shown on diagram.
[1] Insulation p/n 047662050 is sold by the square foot. For Double Insulation order 90 sq. ft.

Refrigeration Circuit
Liquid Line Piping Diagrams

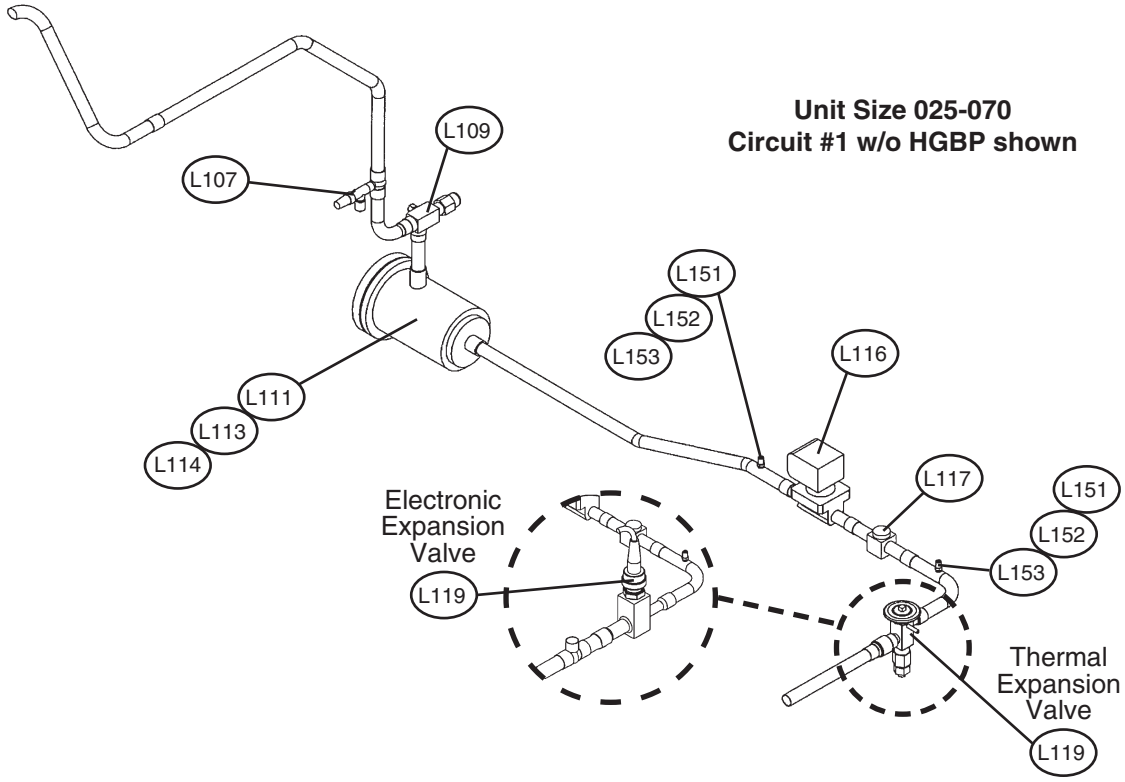

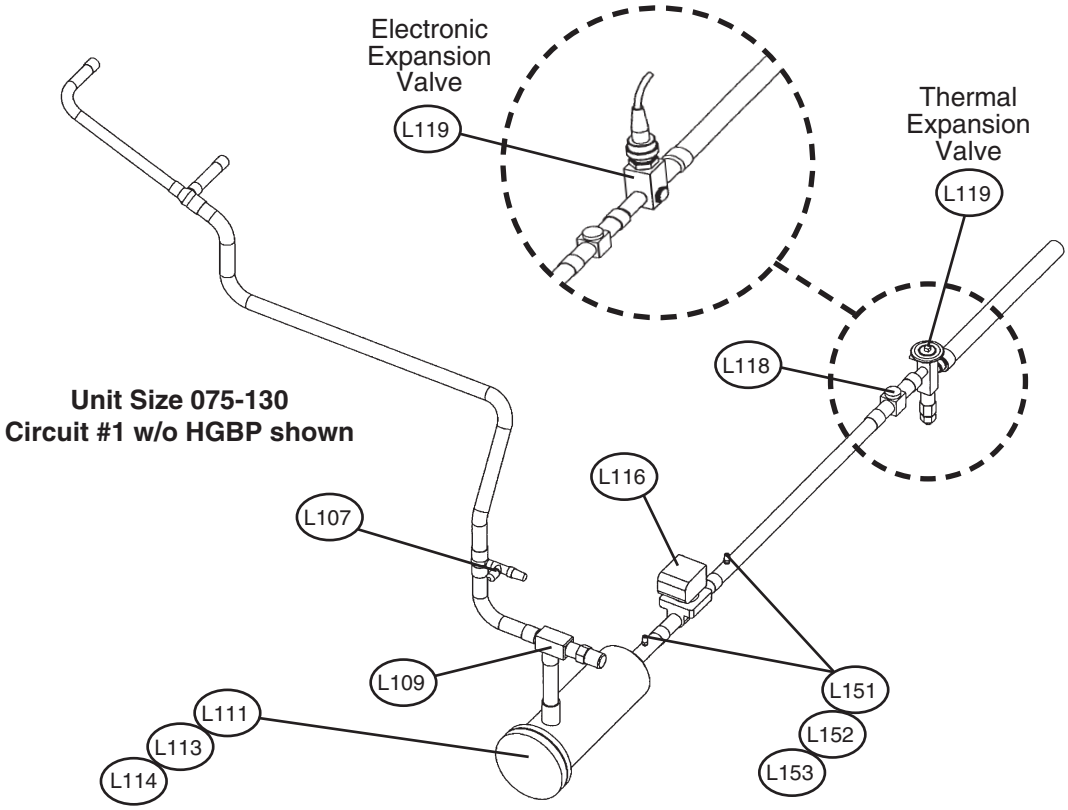

Refrigeration Circuit
Liquid Line Piping Diagrams, Continued

Unit Size 140- 190
Circuit #1 w/o HGBP shown

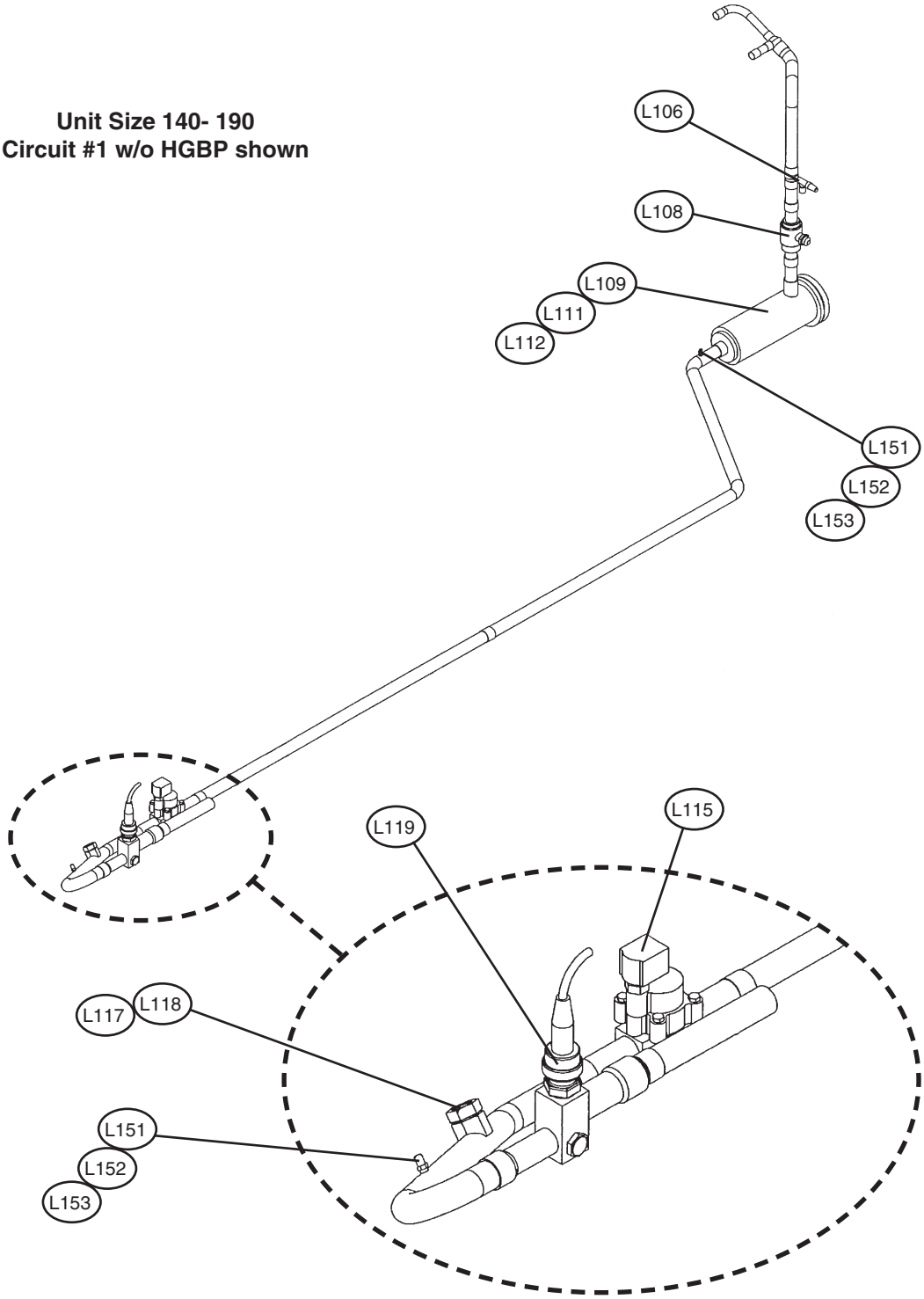

Refrigeration Circuit
Liquid Line Piping Components

Ref.#	Description	Part Number	Unit Sizes	
			Packaged Unit	Remote Evap.
			025- 070	
L107	Valve- Charge .37” x .37”	038689900	1 per circuit	1 per circuit
L109	Valve- Refrigerant, Angle .88”	072401302	1 per circuit	1 per circuit
L111	Filter Drier- Shell	001360700	1 per circuit	
L113	Filter Drier- Core	070339101	1 per circuit	
L114	Filter Drier- Gasket Kit	074783601	1 per circuit	
L116	Valve- Solenoid	331761602	1 per circuit	
L117	Sight Glass .875”	330508601	1 per circuit	
L119	Thermal Expansion Valve (025-040) [1]	331761511	1 per circuit	
L119	Thermal Expansion Valve (045-055) [1]	331761512	1 per circuit	
L119	Thermal Expansion Valve (060-070) [1]	331761513	1 per circuit	
L119	Electronic Expansion Valve (050-055) [2]	332870801	1 per circuit	
L119	Electronic Expansion Valve (060-070) [2]	332870802	1 per circuit	
N/S	Cable- Electronic Expansion Valve	331409904	1 per circuit	
L151	Valve- Schrader	071100801	2 per circuit	
L152	Valve- Core	026541100	2 per circuit	
L153	Valve- Cap	032943500	2 per circuit	
			075- 130	
L107	Valve- Charge .37” x .37”	038689900	1 per circuit	1 per circuit
L109	Valve- Refrigerant, Angle 1.13”	048169601	1 per circuit	1 per circuit
L111	Filter Drier- Shell	019190500	1 per circuit	
L113	Filter Drier- Core	070339101	2 per circuit	
L114	Filter Drier- Gasket Kit	074783601	2 per circuit	
L116	Valve- Solenoid	331761603	1 per circuit	
L118	Sight Glass 1.125”	330508602	1 per circuit	
L119	Thermal Expansion Valve (075-125) [1]	331761514	1 per circuit	
L119	Thermal Expansion Valve (130) [1]	331761515	1 per circuit	
L119	Electronic Expansion Valve (075-100) [2]	332870803	1 per circuit	
L119	Electronic Expansion Valve (110-130) [2]	332870804	1 per circuit	
N/S	Cable- Electronic Expansion Valve	331409904	1 per circuit	
L151	Valve- Schrader	071100801	2 per circuit	
L152	Valve- Core	026541100	2 per circuit	
L153	Valve- Cap	032943500	2 per circuit	

N/S= Not shown on diagram.
[1] Code 25= TE.
[2] Code 25= EE. Not available on sizes 025- 045.

Refrigeration Circuit
Liquid Line Piping Components, Continued

Ref.#	Description	Part Number	Unit Sizes	
			Packaged Unit	Remote Evap.
			140- 190	
L106	Valve- Charge .37” x .37”	038689900	1 per circuit	1 per circuit
L108	Valve- Refrigerant, Ball 1.38”	330286086	1 per circuit	1 per circuit
L109	Filter Drier- Shell	024881100	1 per circuit	
L111	Filter Drier- Core	070339101	2 per circuit	
L112	Filter Drier- Gasket Kit	074783601	2 per circuit	
L115	Valve- Solenoid	331761604	1 per circuit	
L117	Sight Glass Saddle Adapter	330508704	1 per circuit	
L118	Sight Glass	330508701	1 per circuit	
L119	Electronic Expansion Valve [1]	332870805	1 per circuit	
L151	Valve- Schrader	071100801	2 per circuit	
L152	Valve- Core	026541100	2 per circuit	
L153	Valve- Cap	032943500	2 per circuit	

[1] Code 25= EE. TXV valves (Code 25= TE) are not available on sizes 140 and larger.

Refrigeration Circuit
Discharge Line Piping Diagrams

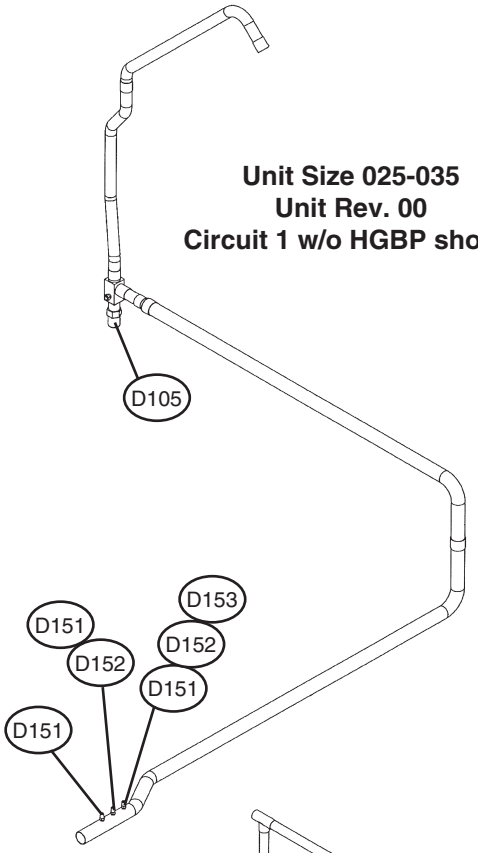

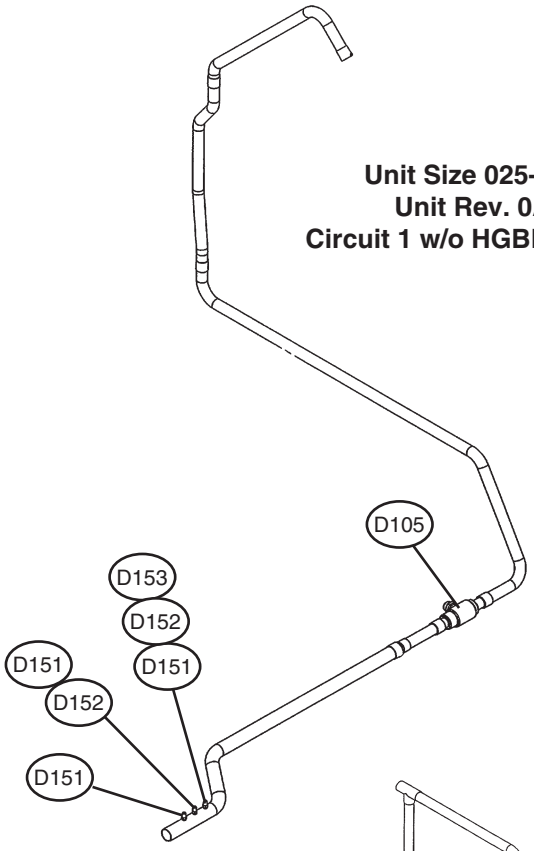

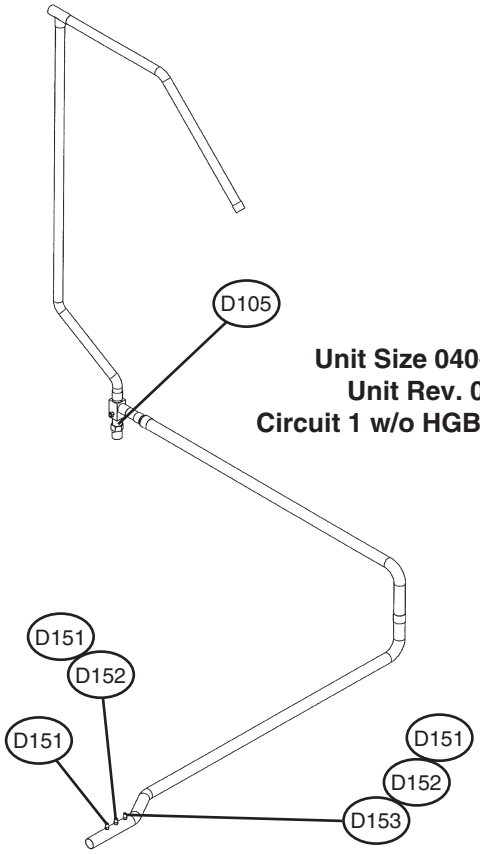

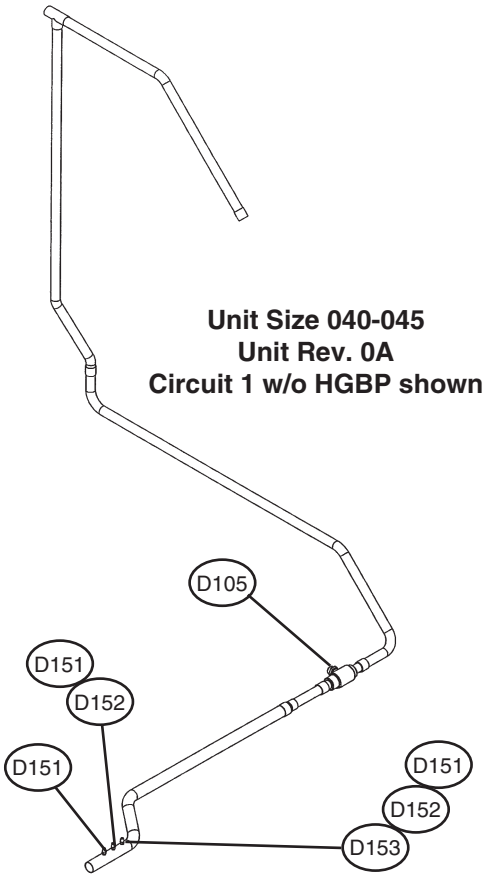

Refrigeration Circuit
Discharge Line Piping Diagrams, Continued

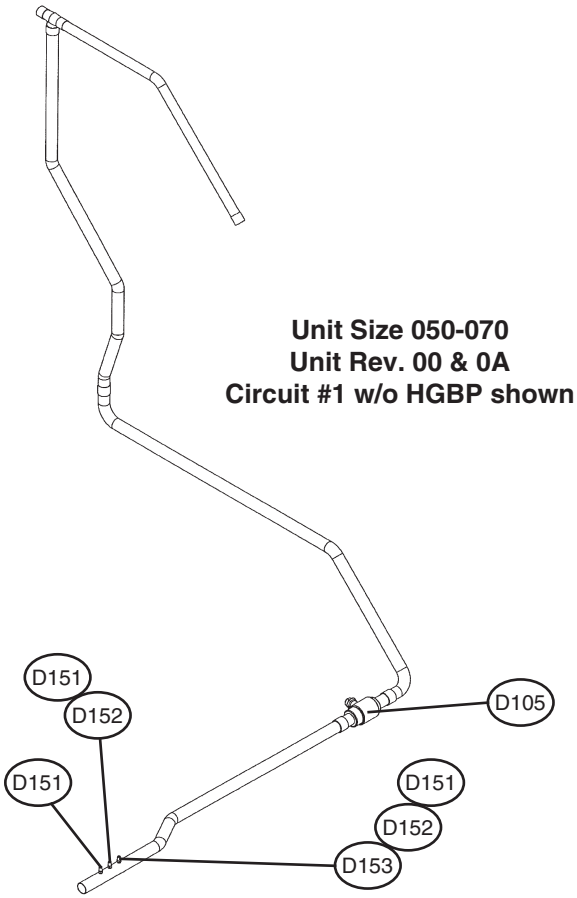

Unit Size 050-070
Unit Rev. 00 & 0A
Circuit #1 w/o HGBP shown

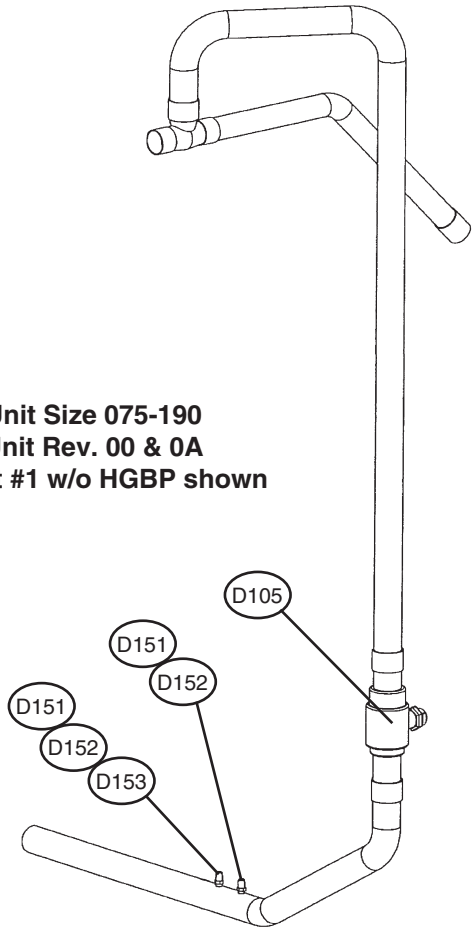

Unit Size 075-190
Unit Rev. 00 & 0A
Circuit #1 w/o HGBP shown

Refrigeration Circuit
Discharge Line Piping Components

Ref.#	Description	Part Number	Unit Size [1]		
			025- 045	050- 070	075- 190
D105	Valve- Discharge Shut-Off				
	1.12” (Unit Rev. Code 55=00)	048169601	1		
	1.12” (Unit Rev. Code 55=0A)	330286085	1		
	1.38” (Unit Rev. Code 55=00)	330286086		1	
	1.68” (Unit Rev. Code 55=00)	330286087			1
D151	Valve- Schrader	071100801	3	3	2
D152	Valve- Core	026541100	2	2	2
D153	Valve- Cap	032943500	1	1	1

[1] Quantities listed are PER circuit.

Refrigeration Circuit
Suction Line Piping Diagrams

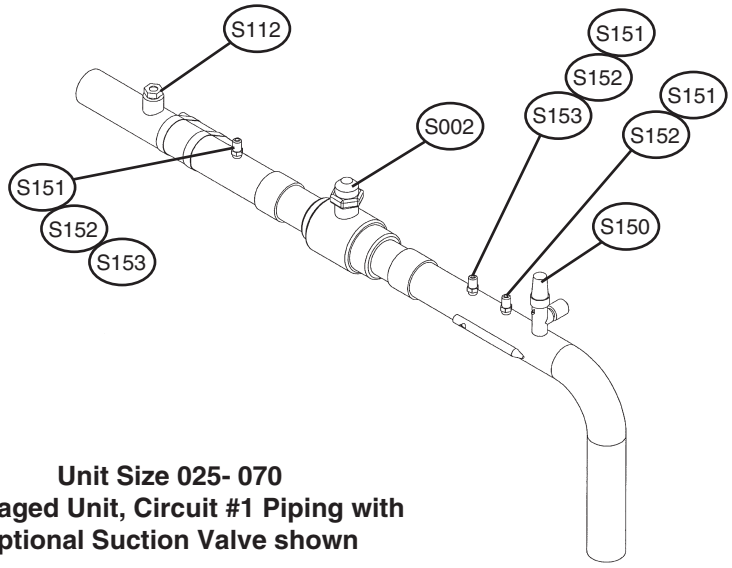

Unit Size 025- 070
Packaged Unit, Circuit #1 Piping with optional Suction Valve shown

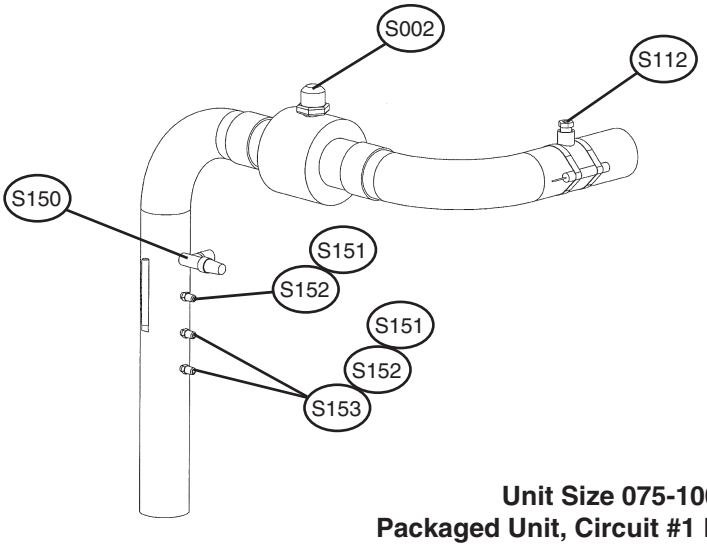

Unit Size 075-100
Packaged Unit, Circuit #1 Piping with optional Suction Valve shown

Refrigeration Circuit
Suction Line Piping Diagrams, Continued

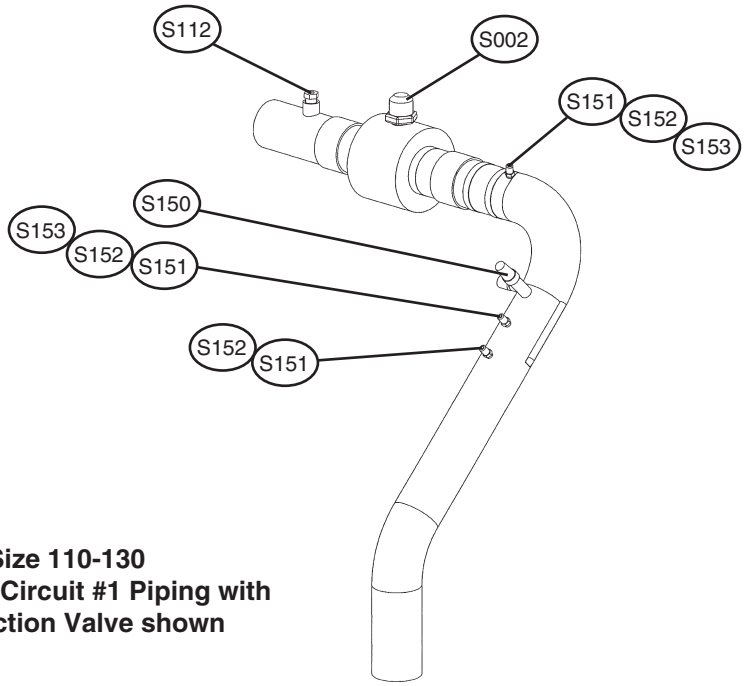

Unit Size 110-130
Packaged Unit, Circuit #1 Piping with optional Suction Valve shown

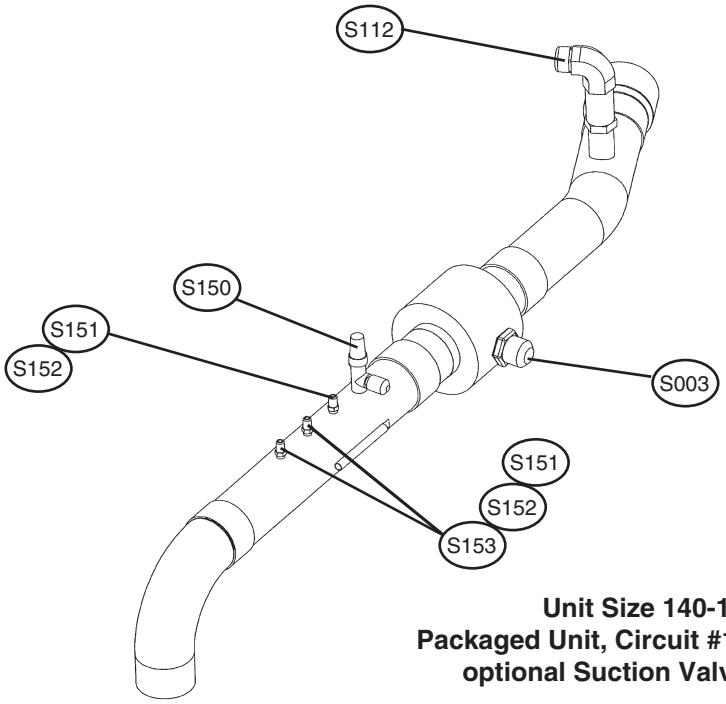

Unit Size 140-190
Packaged Unit, Circuit #1 Piping with optional Suction Valve shown

Refrigeration Circuit
Suction Line Piping Components

Ref.#	Description	Part Number	Unit Sizes			
			025- 065	070	075- 130	140- 190
S002	Valve- Ball 1.63”	330286087	1			
S002	Valve- Ball 2.12”	330286088		1		
S002	Valve- Ball 2.63”	330286009			1	
S003	Valve- Ball 2.63”	330286009				1
S112	Fusible Plug .38” NPT	331543401	1	1	1	
S112	Valve- Pressure Relief	039441300				1
S150	Valve- Charge .37” x .37”	038689900	1	1	1	1
S151	Valve- Schrader	071100801	[1]	[1]	[1]	[1]
S152	Valve- Core	026541100	[1]	[1]	[1]	[1]
S153	Valve- Cap	032943500	[2]	[2]	[2]	[2]

[1] Code 24= HG, HS and/or Code 25= TE use 3pc. Code 24= FH and/or Code 25= EE use 2pc.
[2] Code 24= HG, HS and/or Code 25= TE use use 2pc. Code 24= FH and/or Code 25= EE use 1pc.

Refrigeration Circuit
Hot Gas Bypass Piping Diagrams

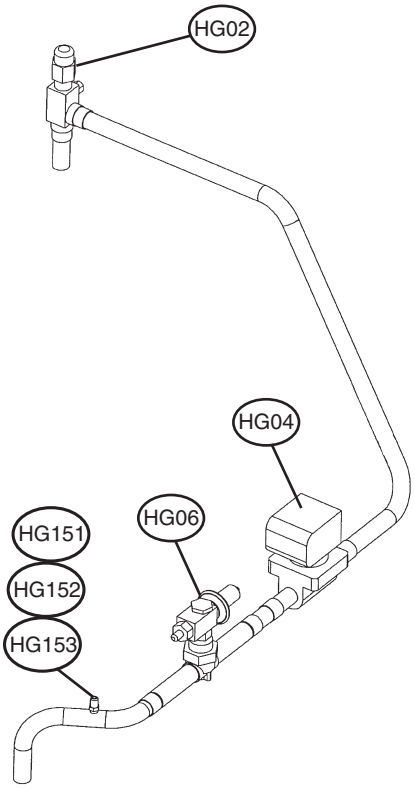

Unit Size 025-070
Packaged Unit, Circuit #1 Piping Shown

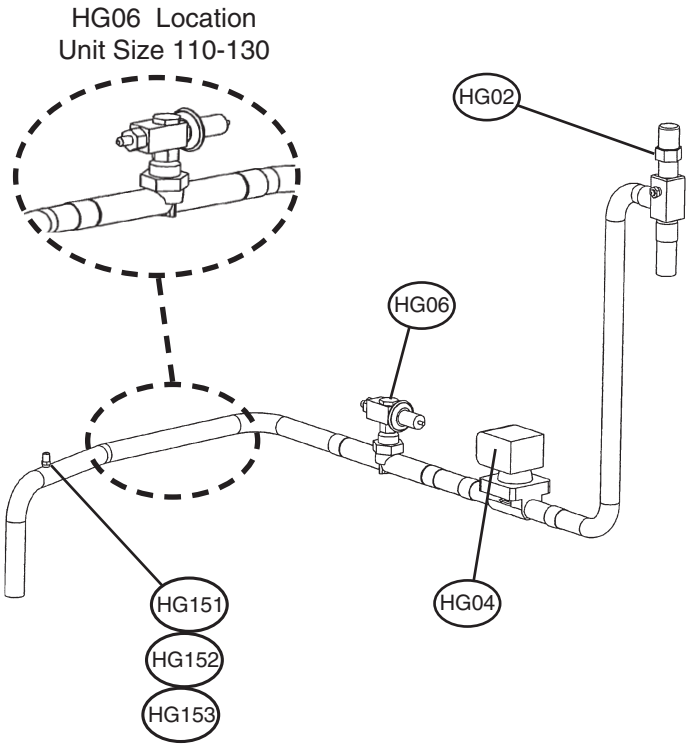

Unit Size 075-130
Packaged Unit, Circuit #1 Piping Shown

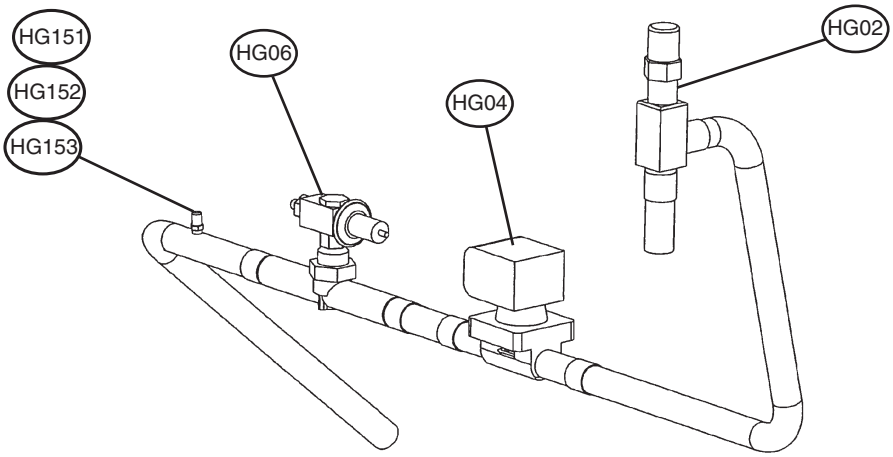

Unit Size 140-190
Packaged Unit, Circuit #1 Piping Shown

Refrigeration Circuit
Hot Gas Bypass Piping Components

Ref.#	Description	Part Number	Unit Sizes [1]	
			Units with HGBP [2]	HGBP Ready [3]
			025- 070	
HG02	Valve- Angle .88” ID	072401302	1	1
HG04	Valve- Solenoid	331761602	1	
HG06	Valve- HGBP	331761701	1	
N/S	Cable- Sol. & HGBP Valves	330286402	2	
HG151	Valve- Schrader	071100801	1	
HG152	Core- Schrader Valve	026541100	1	
HG153	Cap- Schrader Valve	032943500	1	
			075- 190	
HG02	Valve- Angle 1.12”	048169601	1	1
HG04	Valve- Solenoid	331761603	1	
HG06	Valve- HGBP	331761702	1	
N/S	Cable- Sol. & HGBP Valves			
	075- 130 (9.84’ Long)	330286402	2	
	140- 190 (16.4’ Long)	330286403	2	
HG151	Valve- Schrader	071100801	1	
HG152	Core- Schrader Valve	026541100	1	
HG153	Cap- Schrader Valve	032943500	1	

[1] Quantities listed are PER circuit.
[2] Code 24= HG, HS.
[3] Code 24= FH.

Refrigeration Circuit

Sensor & Solenoid Valve Location Diagrams

Unit Sizes 025-070

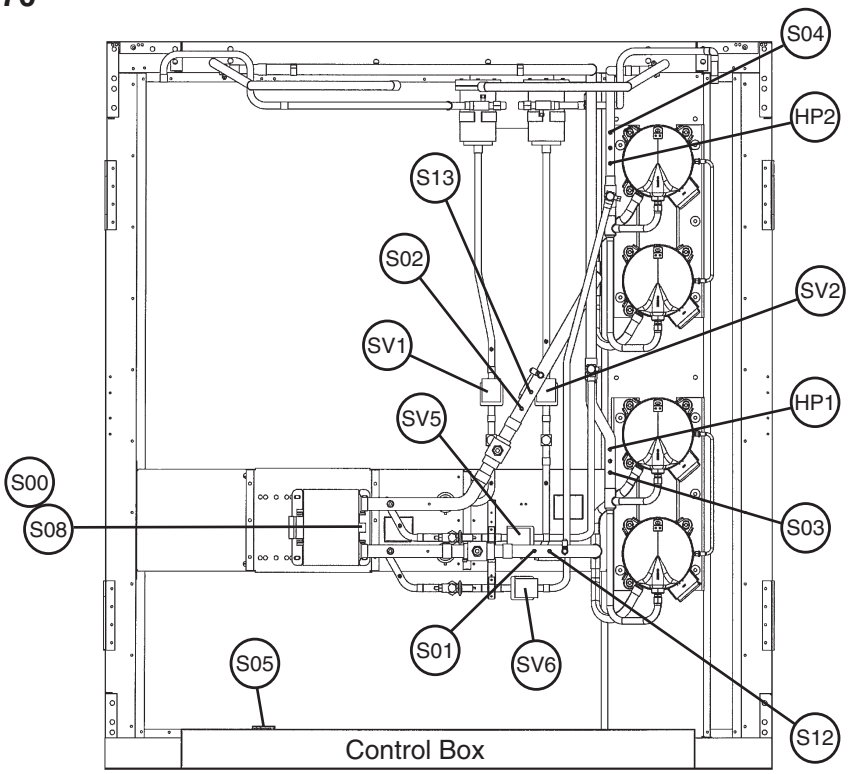

Unit Sizes 075-100

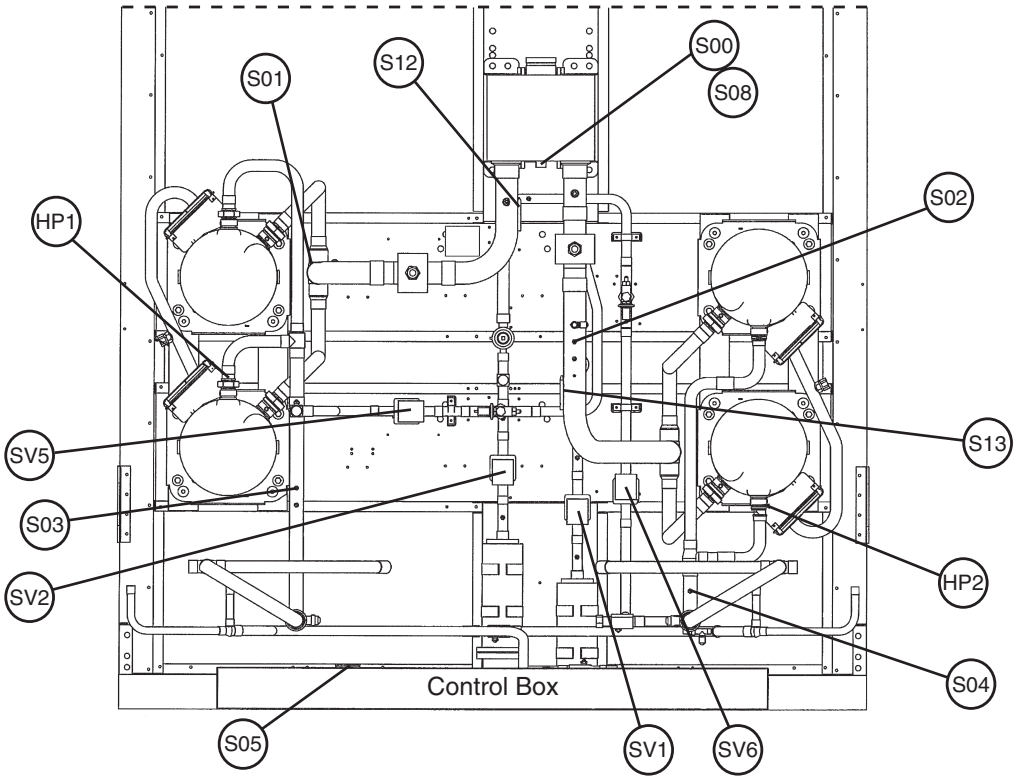

Refrigeration Circuit

Sensor & Solenoid Valve Location Diagrams, Continued

Unit Sizes 110-130

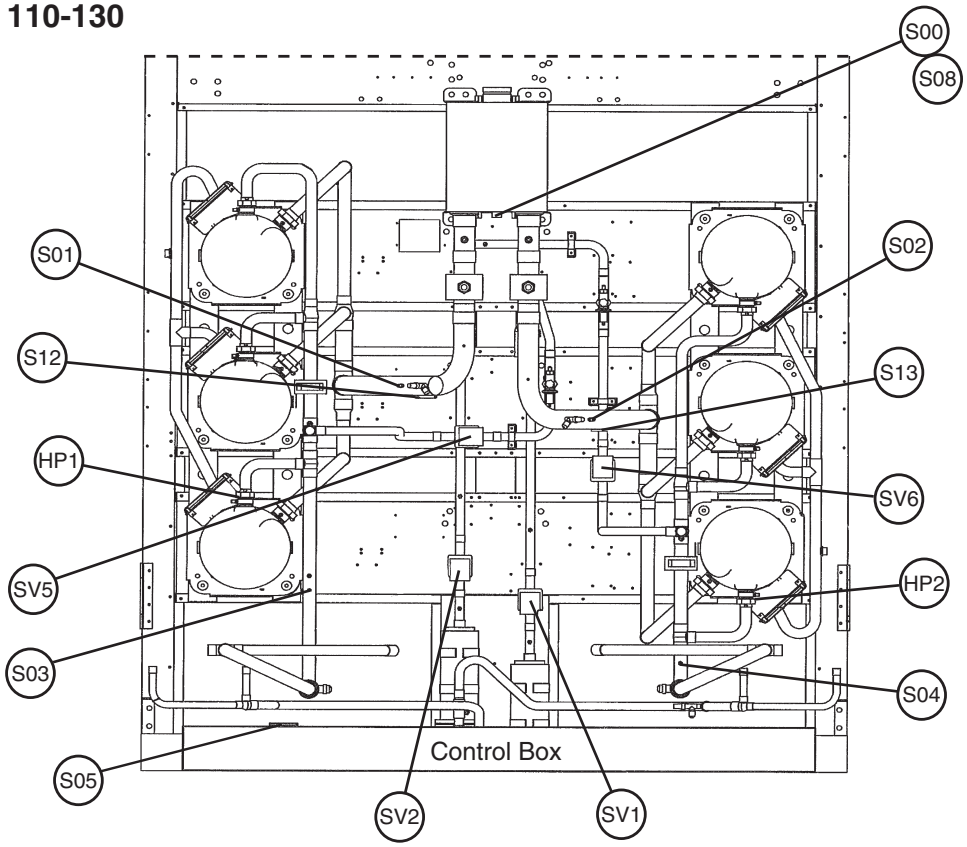

Unit Sizes 140-190

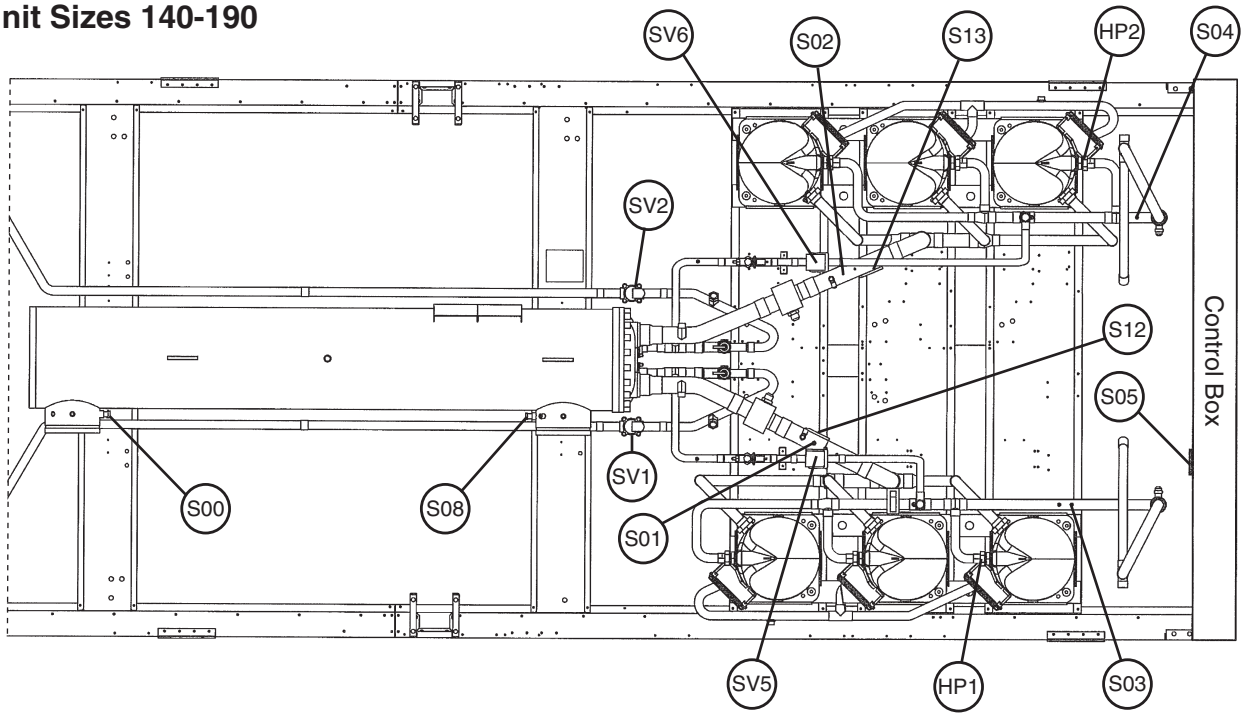

Refrigeration Circuit
Sensor & Solenoid Valve Components

Ref. No.	Description	Part Number	Qty
HP1	Switch- High Pressure Circuit #1, 650 psi	331542401 [3]	1
HP1	Switch- High Pressure Circuit #1, 540 psi	331542402 [4]	1
HP2	Switch- High Pressure Circuit #2, 650 psi	331542401 [3]	1
HP2	Switch- High Pressure Circuit #2, 540 psi	331542402 [4]	1
S00	Sensor- Leaving Water Temperature	193414602	1
S01	Transducer- Suction Pressure Circuit #1	331764511	1
S02	Transducer- Suction Pressure Circuit #2	331764511	1
S03	Transducer- Discharge Pressure Circuit #1	331764611	1
S04	Transducer- Discharge Pressure Circuit #2	331764611	1
N/S	Cable for Transducers, 16 ft.	074667502	4
S05	Sensor- Outside Air Temperature	193414602	1
S08	Sensor- Entering Water Temperature	193414602	1
S12	Sensor- Suction Temperature Circuit #1	193414602	1
S13	Sensor- Suction Temperature Circuit #2	193414602	1
SV1	Valve- Solenoid Circuit #1	[1]	[1]
SV2	Valve- Solenoid Circuit #2	[1]	[1]
SV5	Valve- Hot Gas Bypass Circuit #1	[2]	[2]
SV6	Valve- Hot Gas Bypass Circuit #2	[2]	[2]
N/S	Relief Valve, Condenser	331742701 [4]	2

[1] Refer to the Liquid Line Section for part numbers and quantities.
[2] Refer to the Hot Gas Bypass Section for part numbers and quantities.
[3] Used on units with Code 27= A, D, E, W, Z
[4] Used on units with Code 27= B, C, F, V (Chicago Code)
N/S = Not Shown

Refrigeration Circuit
Miscellaneous Components

Compressor Sound Enclosures (Code 05= WS)

Description		Unit Rev. 00 (Code 55)	Unit Rev. 0A (Code 55)
Sound Enclosure Kit	Unit Size 025-045	331776631	331776631
Sound Enclosure Kit	Unit Size 050-065	331776630	331776630
Sound Enclosure Kit	Unit Size 070	331776632	331776632
Sound Enclosure Kit	Unit Size 075	331776633	331776633
Sound Enclosure Kit	Unit Size 080	331776634	331776633
Sound Enclosure Kit	Unit Size 090-100	331776635	331776633
Sound Enclosure Kit	Unit Size 110	331776636	331776636
Sound Enclosure Kit	Unit Size 125	331776637	331776636
Sound Enclosure Kit	Unit Size 130	331776638	331776636
Sound Enclosure Kit	Unit Size 140-180	331776638	331776637
Sound Enclosure Kit	Unit Size 190	331776638	331776638

One Kit per unit.

Evaporator Components

Ref. #	Description	Part Number	Unit Sizes		
			025-055	060-130	140-190
N/S	Sensor Well	047441511	1	1	
N/S	Heater, Evaporator, 100W	331759201	1		
N/S	Heater, Evaporator, 150W	331759202		1	
N/S	Thermostat, 1-Stage	019754700	1	1	
N/S	Mini-Ball Valve, .50 NPT	071596201			1

N/S = Not Shown on diagram.

Condenser Section
Fan Motor and Fan Deck Diagram

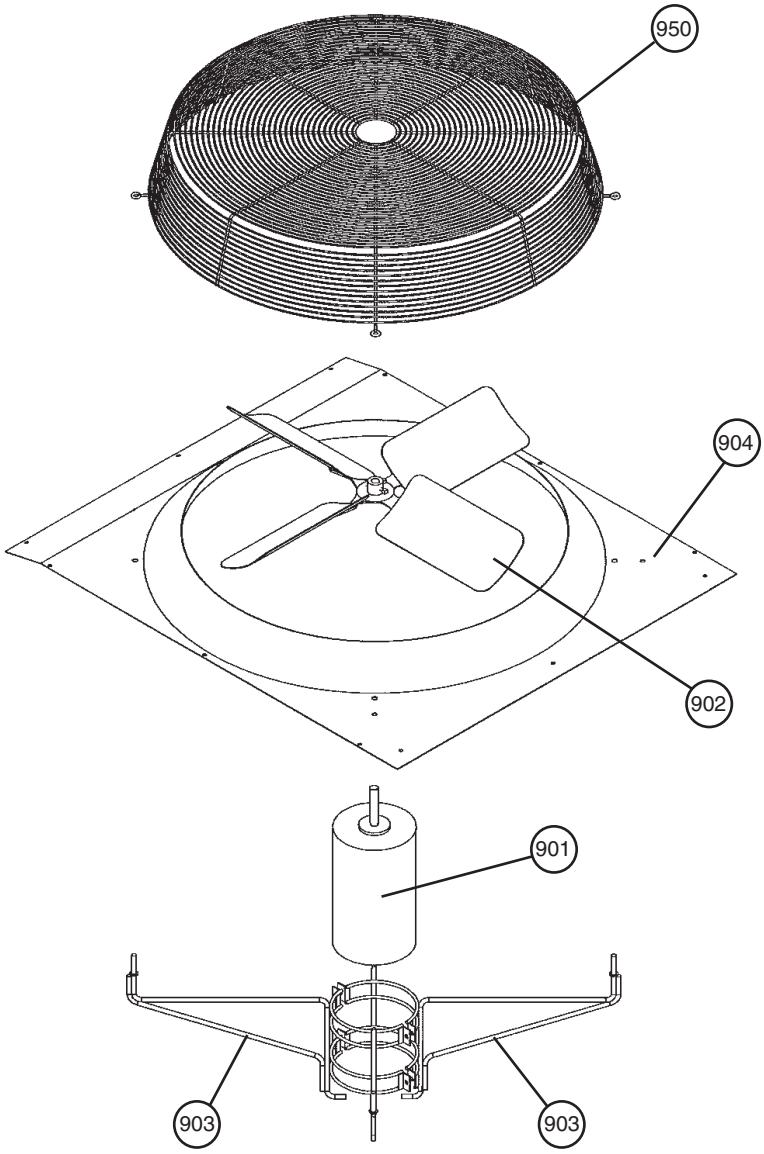

Condenser Section

Fan Motor and Fan Deck Components & Condenser Coils

Fan Motor and Fan Deck Components

Ref.#	Description	Part Number	Unit Sizes [1]	
			025- 060	065- 190
	208/60/3, 230/60/3, 400/60/3, 460/60/3			
901	Motor- 1.5 HP	330423402	1	
902	Fan Blade- 30”	330423901	1	
	208/60/3, 230/60/3			
901	Motor- 2.0 HP	330423302		1
902	Fan Blade- 30”	330294001		1
	380/60/3 [2]			
901	Motor- 2.0 HP	074521001	1	1
902	Fan Blade- 30”	330294001	1	1
	400/50/3, 460/60/3			
901	Motor- 2.0 HP	330293902		1
902	Fan Blade- 30”	330294001		1
	575/60/3 [2]			
901	Motor- 2.0 HP	330423702	1	1
902	Fan Blade- 30”	330294001	1	1
	All Units			
903	Motor Mounting Bracket [3]	330260701	2	2
904	Fan Venturi Panel	330288202	1	1
950	Grille- Fan	331444501	1	1

[1] Quantities listed are PER fan assembly. Refer to Code 02 to determine the number of fans per unit.
[2] 380/60/3 units (Code 16= 46) and 575/60/3 units (Code 16= 37) are only available with 2HP motors.
[3] A complete Fan Motor Mounting Bracket requires two pc. of 330260701.

Condenser Coils

For Condenser Coils, contact Daikin McQuay Parts with model and serial number information so that the correct coil(s) can be identified.

Cabinet Components
AGZ 025- 070, 4 Fan Units

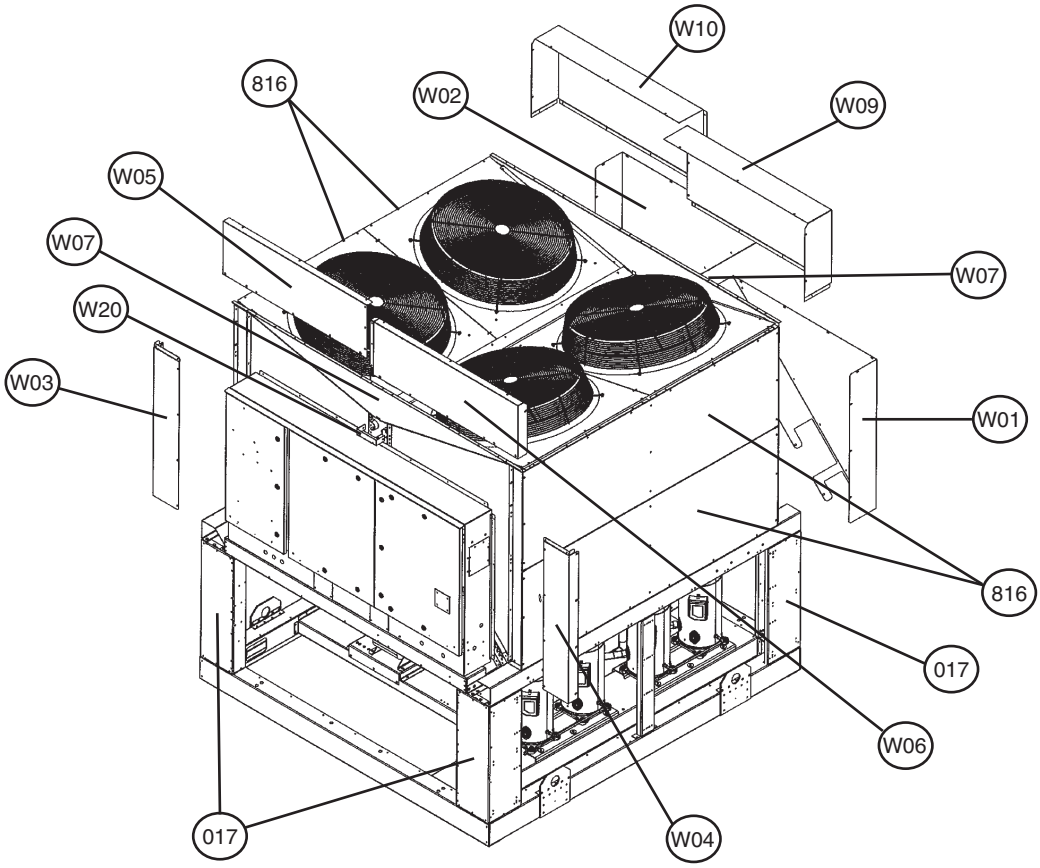

Ref. No.	Description	Part Number	Qty.
W01	Fan End Bottom LH	331766801	1
W02	Fan End Bottom RH	331766701	1
W03	Fan Bottom Front LH	331539901	1
W04	Fan Bottom Front RH	331540001	1
W05	Fan Top Front LH	331539701	1
W06	Fan Top Front RH	331539801	1
W07	Triangular Filler Panel	330515401	2
W09	Fan End Top LH	331768801	1
W10	Fan End Top RH	331768901	1
W20	Control Box Brace	331768301	1
017	Corner Post	331304901	4
816	Coil Blockoff Panel (025- 035)	331541101	4
N/S	Screw .25-20 x 1” Hex Head	046093809	81
N/S	Screw .50-13 x 1.25” Hex Head	072973803	24

Cabinet Components
AGZ 075- 130, 6 & 8 Fan Units, Diagrams

Unit Size 075-100
6 Fan Unit shown [1]

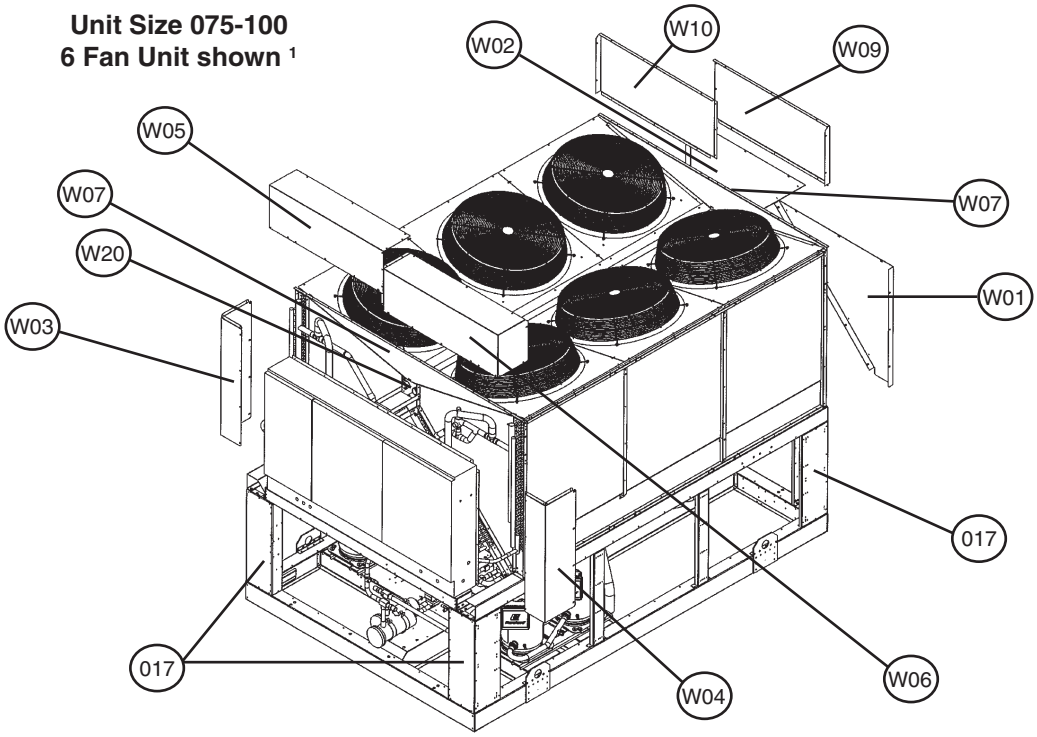

[1] This diagram can be used for all 6 fan units, and for 8 fan units in 380V, 460V, & 575V only.

Unit Size 110-130
8 Fan Low Voltage Unit shown [2]

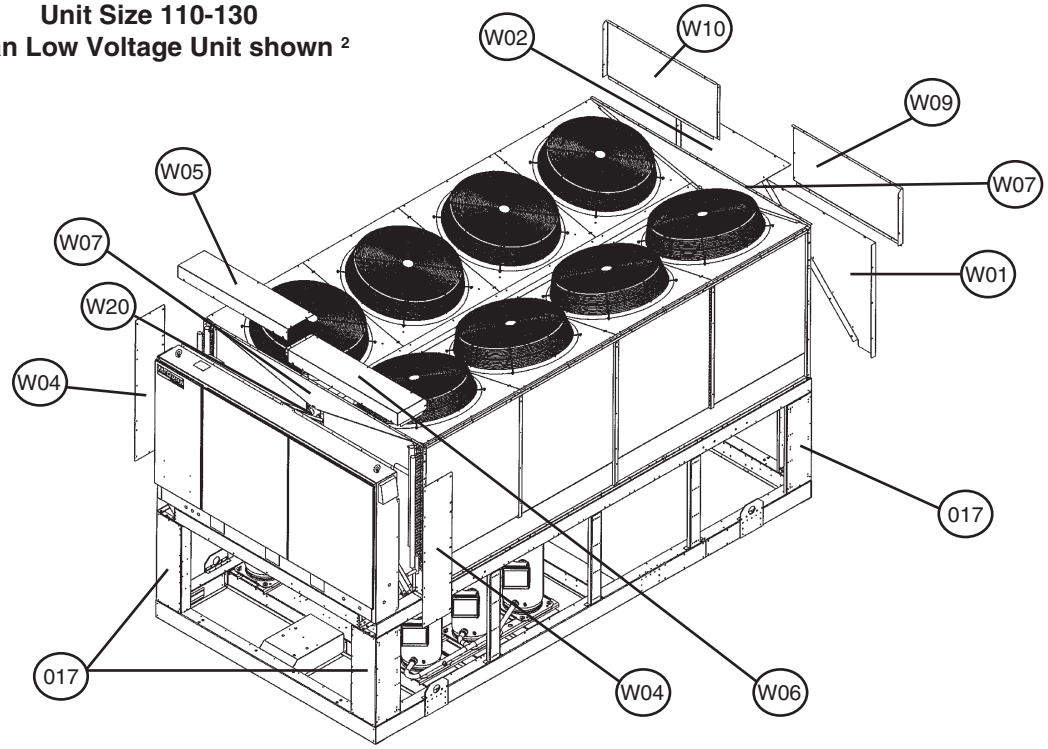

[2] This diagram is used for 8 fan units 208V & 230V only.

Cabinet Components
AGZ 075- 130, 6 & 8 Fan Units, Components

Ref. No.	Description	Part Number	Qty.
W01	Fan End Bottom LH	331768601	1
W02	Fan End Bottom RH	331768701	1
W03	Fan Bottom Front LH (6 Fan or 8 Fan High Voltage)[1]	331767801	1
W04	Fan Bottom Front RH (6 Fan or 8 Fan High Voltage)[1]	331767901	1
W04	Fan Wrap Both Sides (8 Fan Low Voltage) [2]	331545501	2
W05	Fan Top Front LH (6 Fan or 8 Fan High Voltage)[1]	331767601	1
W05	Fan Top Front LH (8 Fan Low Voltage) [2]	331545302	1
W06	Fan Top Front RH (6 Fan or 8 Fan High Voltage)[1]	331767701	1
W06	Fan Top Front RH (8 Fan Low Voltage) [2]	331545402	1
W07	Triangular Filler Panel	330515401	2
W09	Fan End Top LH	331768401	1
W10	Fan End Top RH	331768501	1
W20	Control Box Brace		
	6 & 8 Fan High Voltage Units	331768302	1
	8 Fan Low Voltage Units	331545601	1
017	Corner Post	331304901	4
N/S	Screw .25-20 x 1” Hex Head	046093809	81
N/S	Screw .50-13 x 1.25” Hex Head	072973803	24

[1] Code 16= 27, 37, 52, 46.
[2] Code 16= 12, 29.

Cabinet Components
AGZ 140- 190, 10 & 12 Fan Units

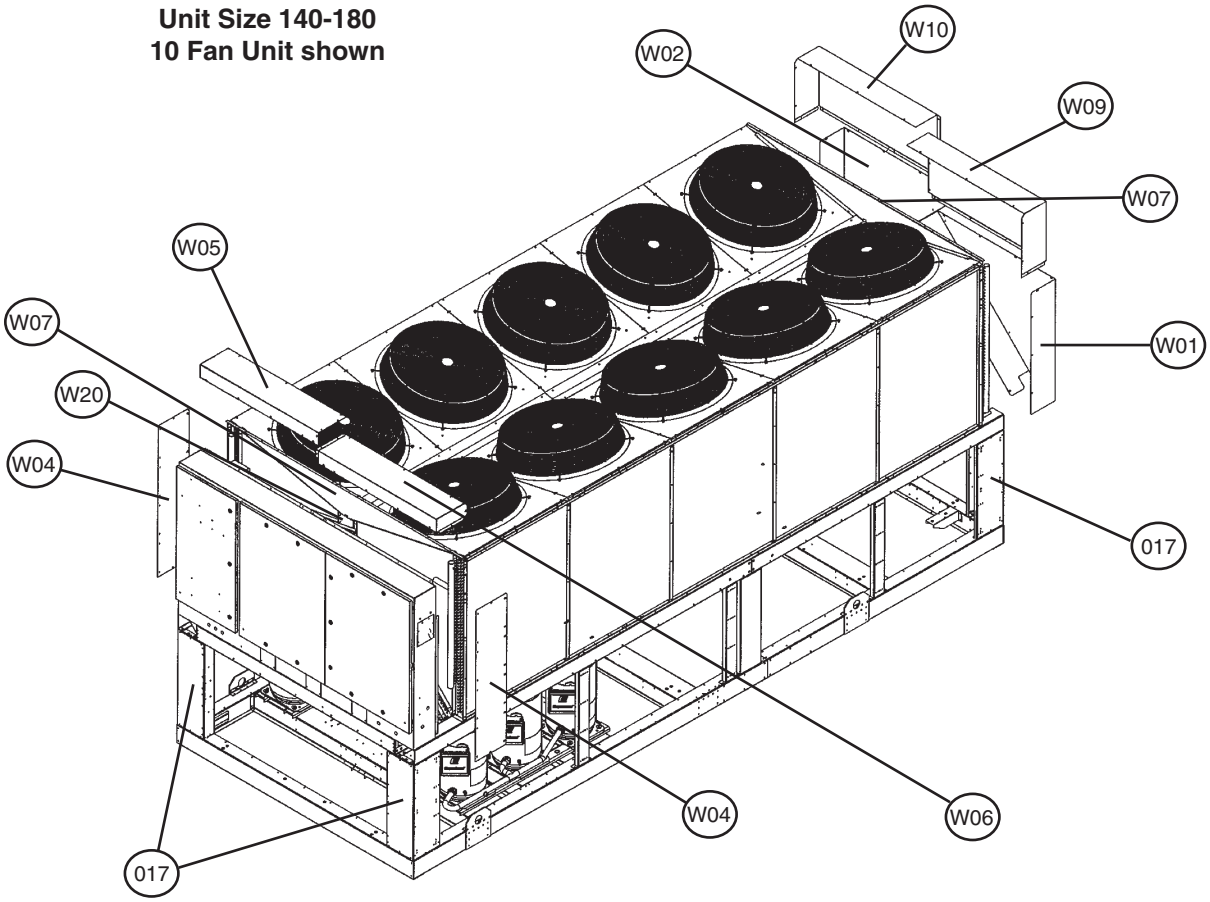

Ref. No.	Description	Part Number	Qty.
W01	Fan End Bottom LH	331545101	1
W02	Fan End Bottom RH	331545201	1
W04	Fan Wrap Both Sides	331545501	2
W05	Fan Top Front LH	331545302	1
W06	Fan Top Front RH	331545402	1
W07	Triangular Filler Panel	330515401	2
W09	Fan End Top LH	331544901	1
W10	Fan End Top RH	331545001	1
W20	Control Box Brace	331545601	1
017	Corner Post	331304901	4
N/S	Screw .25-20 x 1” Hex Head	046093809	81
N/S	Screw .50-13 x 1.25” Hex Head	072973803	24

Coil & Base Guards

AGZ 040- 190 Condenser Coil Grilles & Louvers

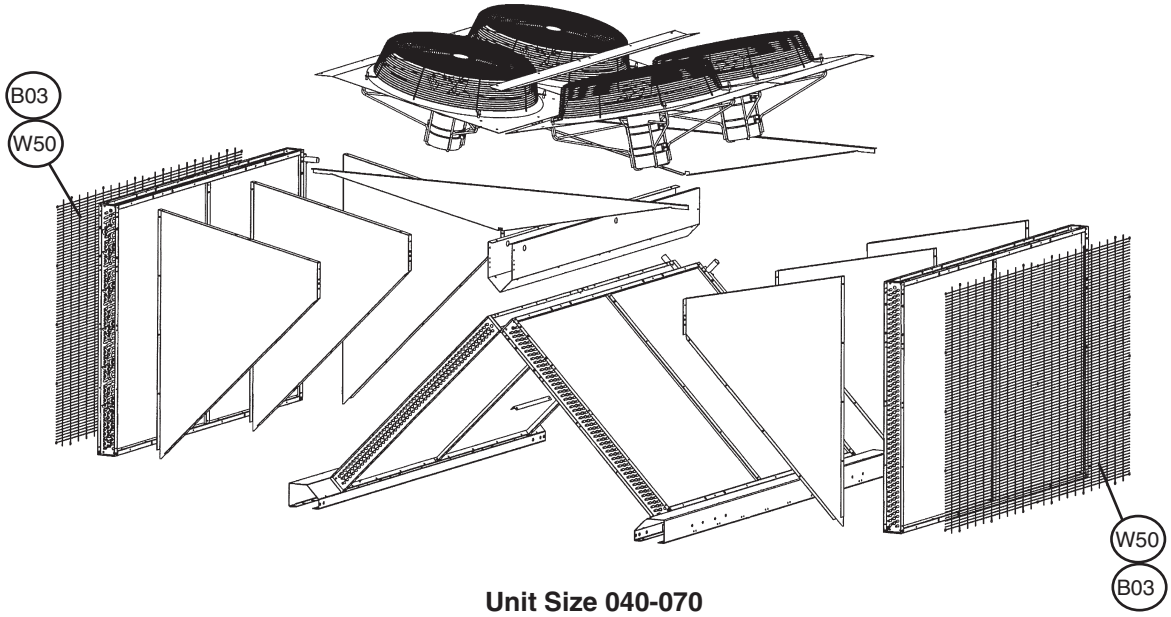

Unit Size 040-070
Coil Grilles Shown
(Louvers not shown)

Ref.#	Description	Part Number	Unit Sizes [1]				
			040-070	075-100	110-130	140-180	190
	Coil Grilles						
B03	Screw .164-32 x .50	046093801	14/grille	14/grille	14/grille	14/grille	14/grille
W50	Grille- Coil 38.00 x 52.00”	330802401	4	6	8	10	12
	Coil Louvers						
N/S	Screw .25-20 x .50 Hex Head	046093807	16/louver	16/louver	16/louver	16/louver	16/louver
N/S	Louver- Coil 39.20 x 52.20”	330455001	4	6	8	10	12

N/S = Not Shown on diagram.
[1] Not available for sizes 025- 035.

Coil & Base Guards

Units w/o an Optional Pump Package: Code 42= NNNN

AGZ 025- 130 Base Grilles

Unit Size 025-070
4 Fan Unit shown

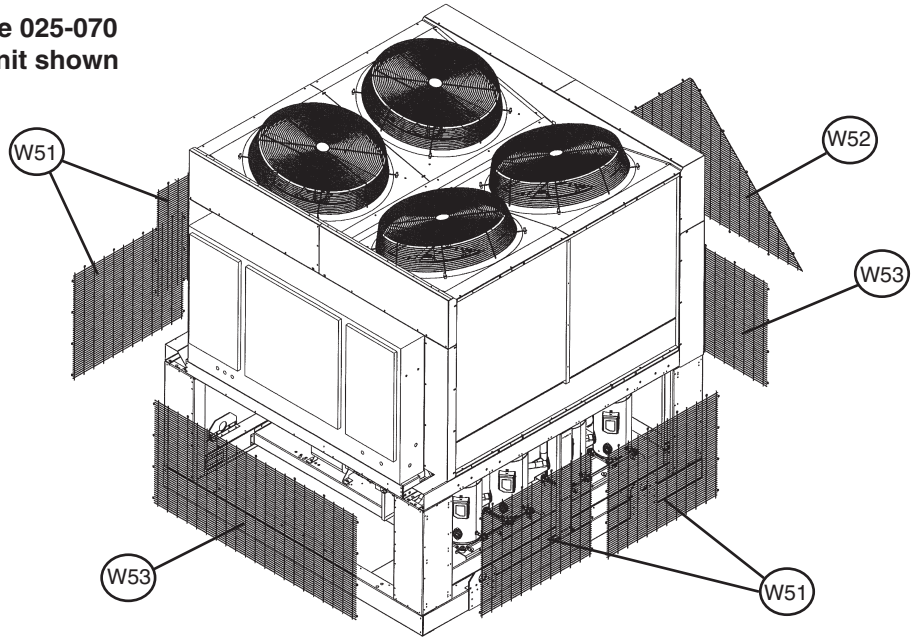

Ref.#	Description		Part Number	Unit Sizes		
				030-070	075-100	110-130
N/S	Base Grille Kit [1]		331776611	1		
N/S	Base Grille Kit [1]		331776612		1	
N/S	Base Grille Kit [1]		331776613			1
W51	Grille- Side	36.30 x 31.50”	330496301	4	6	8
W52	Grille- Triangle	75.80 x 37.45”	330515201	1	1	1
W53	Grille- End	69.07 x 31.38”	331868301	2	2	2
N/S	Screw	.25-20 x .50” Hex Head	046093807	Quantity As Needed		

N/S = Not Shown on diagram.
[1] Kits include all required grilles and mounting hardware.

Coil & Base Guards

Units w/o an Optional Pump Package: Code 42= NNNN

AGZ 140- 190 Base Grilles

Unit Size 140-180
10 Fan Unit shown

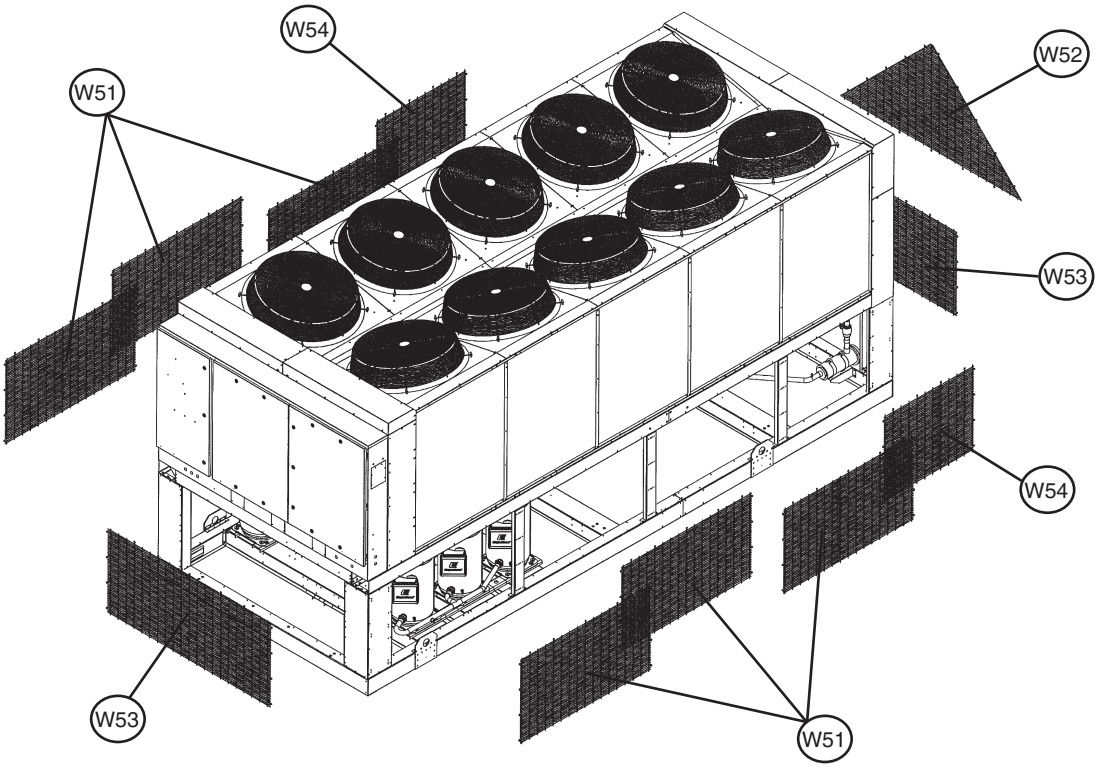

Ref.#	Description		Part Number	Unit Sizes 140-180	Unit Sizes 190
N/S	Base Grille Kit [1]		331776614	1	
N/S	Base Grille Kit [1]		331776615		1
W51	Grille- Side	54.68 x 31.38”	330802501	6	6
W52	Grille- Triangle	75.80 x 37.45”	330515201	1	1
W53	Grille- End	69.07 x 31.38”	331868301	2	2
W54	Grille- Side	36.30 x 31.82”	330496301	2	4
N/S	Screw	.25-20 x .50” Hex Head	046093807	Quantity As Needed	

N/S = Not Shown on diagram.
[1] Kits include all required grilles and mounting hardware.

Coil & Base Guards

Units w/ an Optional Pump Package: Code 42= PPZS, PPZD
AGZ 025- 190 Base Grilles

Unit Size 025-070
4 Fan Unit shown

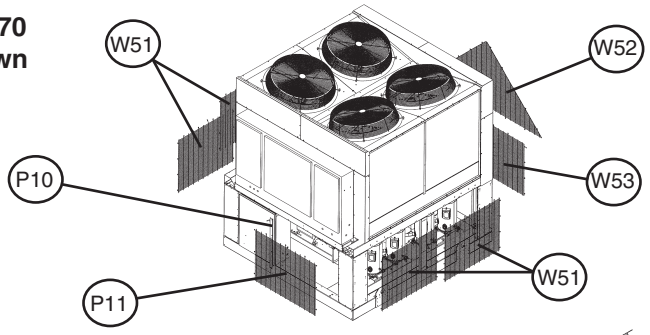

Unit Size 140-180
10 Fan Unit shown

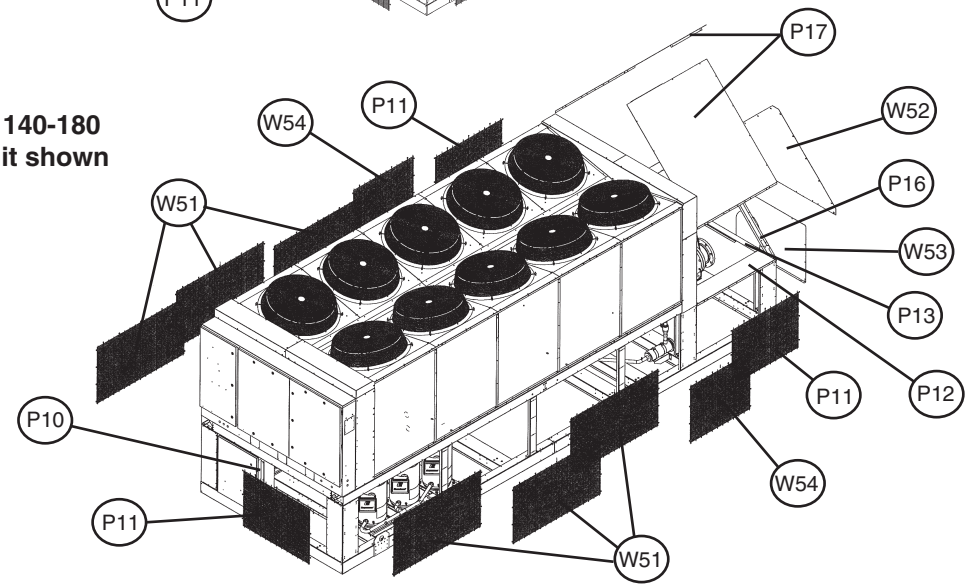

Ref.#	Description	Part Number	Unit Sizes 025-070	075-100	110-130	140-180	190
P10	Bracket- Grille Mount	331739101	1	1	1	1	1
P11	Grille- Pump Pkg. 42.18 x 31.49”	331739201	1	1	1	3	3
P12	Bracket- Grille Mtg. 10.25 x 49.44”	331739301				2	2
P13	Bracket- Grille Mtg. 3.00 x 67.75”	331739401				1	1
P16	Top Support 4.00 x 62.19”	331490502				4	4
P17	Rear Cover 49.50 x 62.45”	331490604				2	2
W51	Grille- Side 54.68 x 31.38”	330496301	4	6	8		
W51	Grille- Side 54.68 x 31.38”	330802501				6	6
W52	Grille- Triangle 75.80 x 37.45”	330515201	1	1	1	1	1
W53	Grille- End 69.07 x 31.38”	331868301	1	1	1		
W53	Grille- End 69.87 x 31.29”	331739502				1	1
W54	Grille- Side 36.30 x 31.82”	330496301				2	4
N/S	Screw .25-20 x .50” Hex Head	046093807	Quantity as needed				

N/S = Not Shown on diagram.

Coil & Base Guards

Units w/o an Optional Pump Package: Code 42= NNNN

AGZ 025- 180 Base Louvers Layout Diagrams

Unit Size 025-070
4 Fan Unit

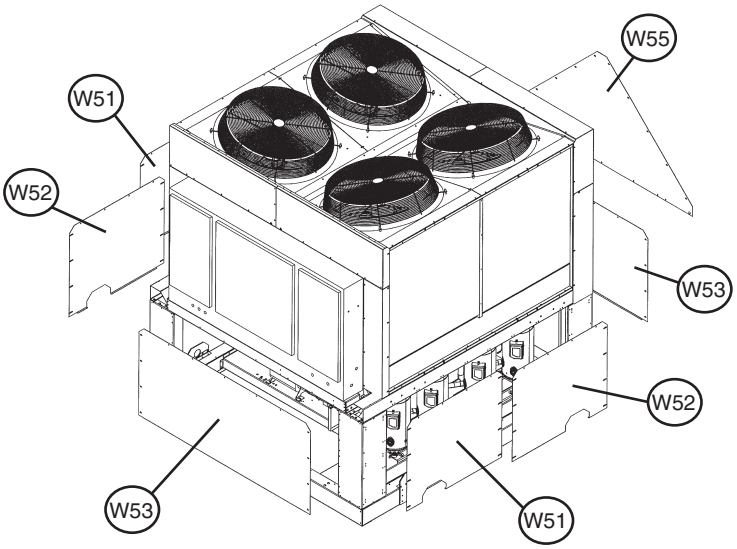

Unit Size 075-100
6 Fan Unit

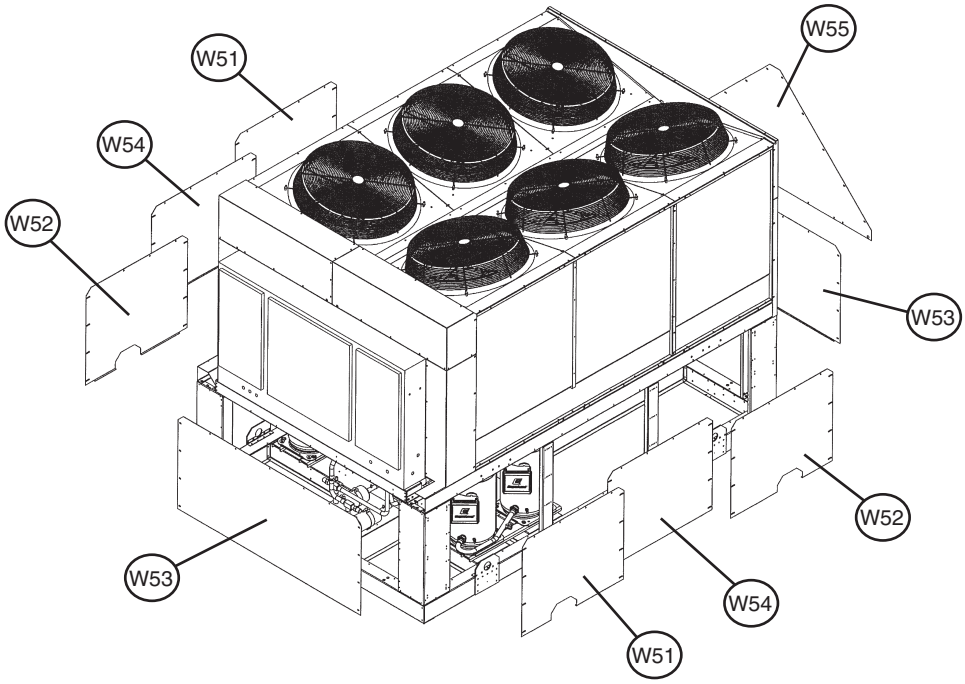

Coil & Base Guards

Units w/o an Optional Pump Package: Code 42= NNNN

AGZ 025- 180 Base Louvers Layout Diagrams, Continued

Unit Size 110-130
8 Fan Unit

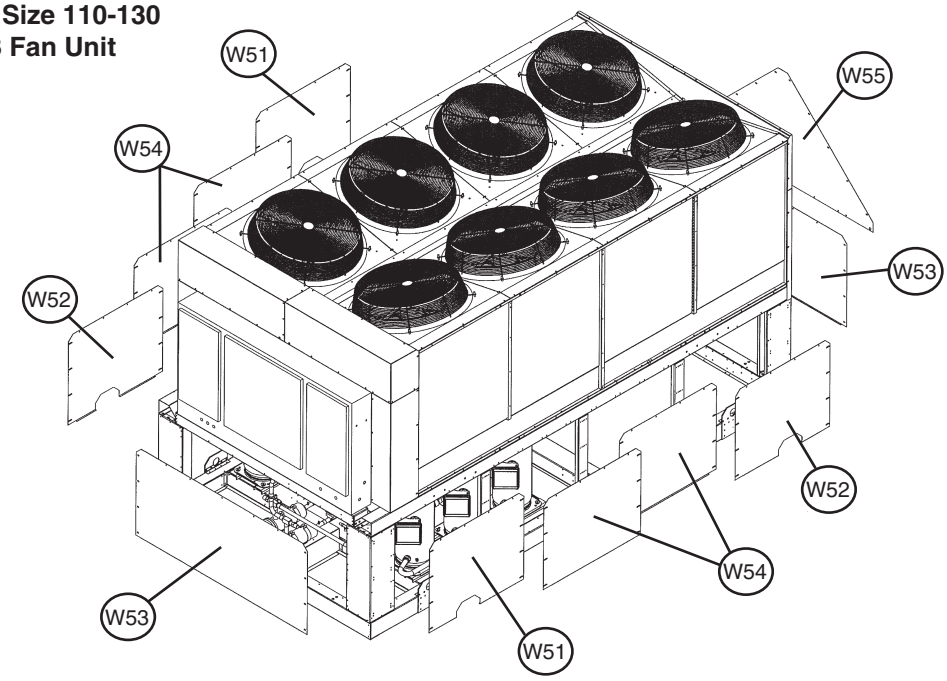

Unit Size 140-180
10 Fan Unit

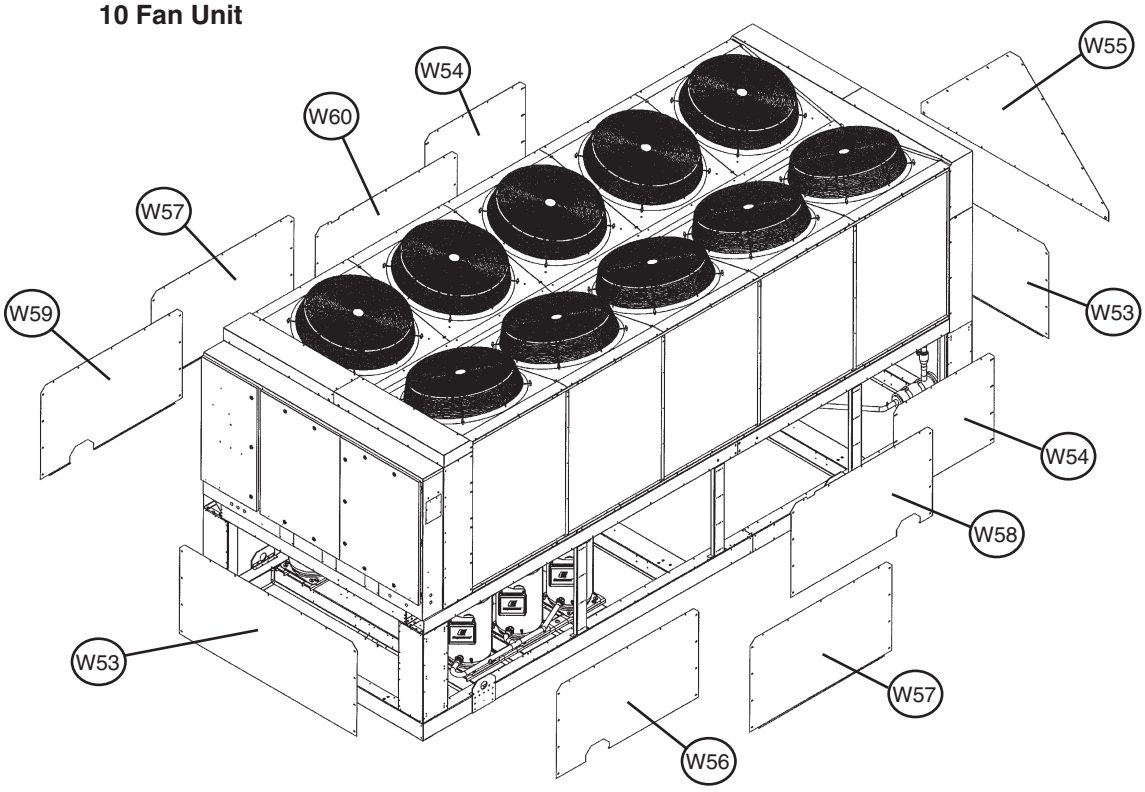

Coil & Base Guards

Units w/o an Optional Pump Package: Code 42= NNNN

AGZ 190 Base Louvers Layout Diagram & AGZ 025-190 Louver Components

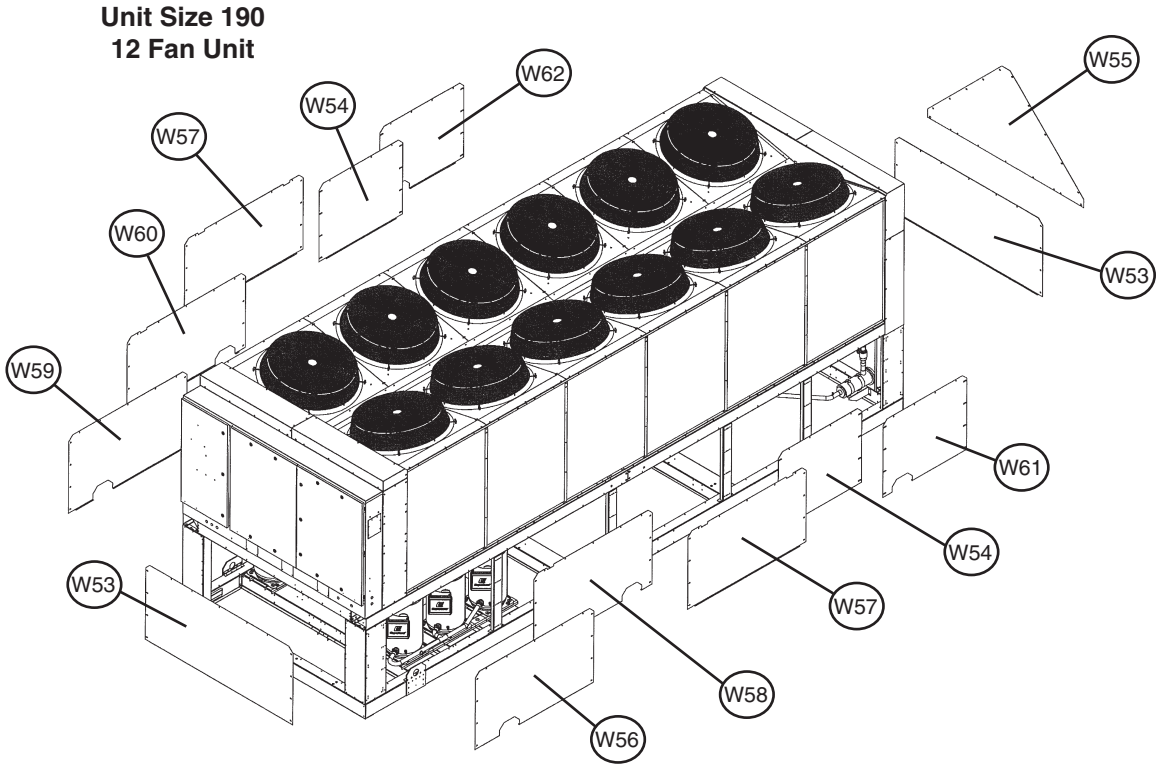

Ref.#	Description	Part Number	Unit Sizes 025-070	075-100	110-130	140-180	190
N/S	Base Louver Kit [1]	331776601	1				
N/S	Base Louver Kit [1]	331776602		1			
N/S	Base Louver Kit [1]	331776603			1		
N/S	Base Louver Kit [1]	331776604				1	
N/S	Base Louver Kit [1]	331776605					1
W51	Louvered Panel 38.86 x 31.75”	330718601	2				
W51	Louvered Panel 38.86 x 31.75”	330718603		2	2		
W52	Louvered Panel 38.86 x 31.75”	330718602	2				
W52	Louvered Panel 38.86 x 31.75”	330718604		2	2		
W53	Louvered Panel 70.83 x 31.75”	331305801	2	2	2	2	2
W54	Louvered Panel 40.00 x 31.75”	330707101		2	4	2	2
W55	Louvered Triangle 75.00 x 39.00”	330708101	1	1	1	1	1
W56	Louvered Panel 56.50 x 31.75”	331868401				1	1
W57	Louvered Panel 56.50 x 31.75”	330708001				2	
W57	Louvered Panel 56.50 x 31.75”	330708002					2
W58	Louvered Panel 56.50 x 31.75”	331868501				1	1
W59	Louvered Panel 56.50 x 31.75”	331868601				1	1
W60	Louvered Panel 56.50 x 31.75”	331868701				1	1
W61	Louvered Panel 40.00 x 31.75”	330707301					1
W62	Louvered Panel 40.00 x 31.75”	330707201					1
N/S	Screw .25-20 x .50” Hex Head	046093807	Quantity as needed				

N/S = Not Shown on diagram.

[1] Kits include all required louvers and mounting hardware.

Coil & Base Guards

Units w/ an Optional Pump Package: Code 42= PPZS, PPZD

AGZ 025- 190 Base Louvers Diagrams

Unit Size 025-070
4 Fan Unit

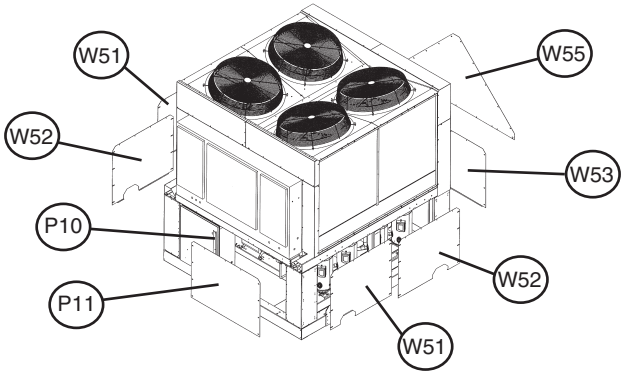

Unit Size 075-100
6 Fan Unit

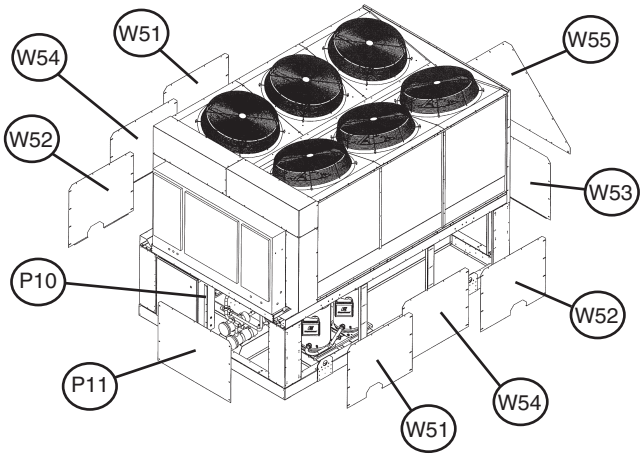

Unit Size 110-130
8 Fan Unit

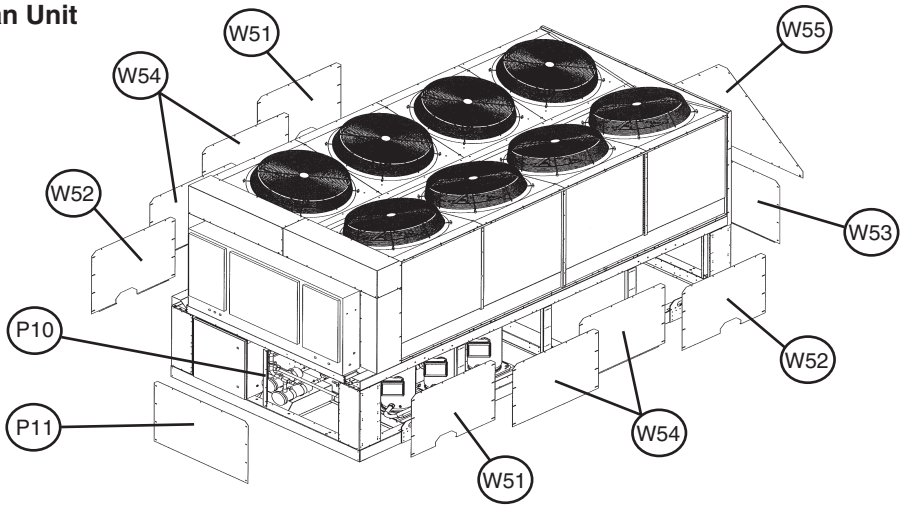

Coil & Base Guards

Units w/ an Optional Pump Package: Code 42= PPZS, PPZD

AGZ 025- 190 Base Louvers Diagrams

Unit Size 140-180
10 Fan Unit shown

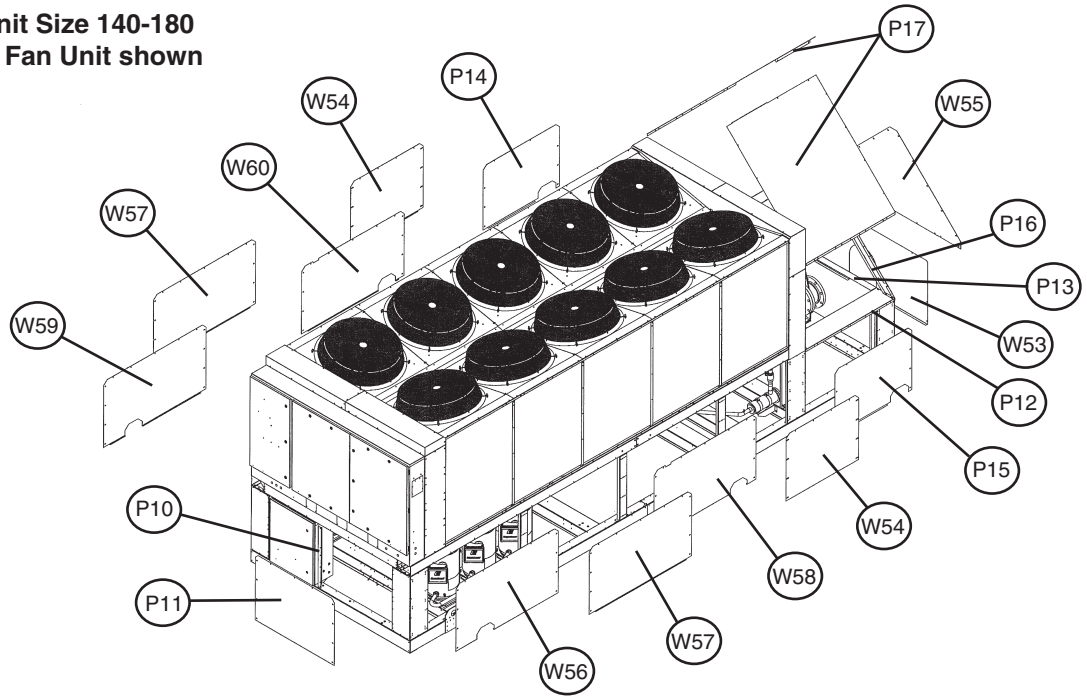

Unit Size 190
12 Fan Unit shown

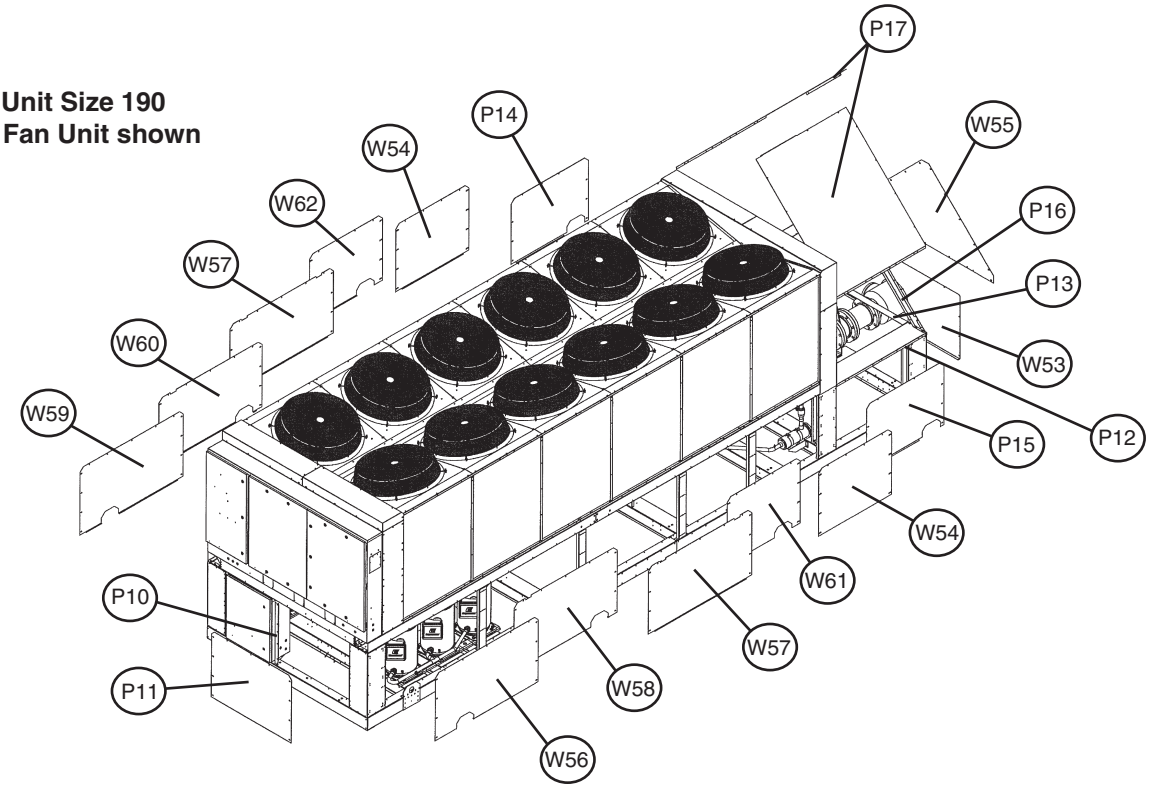

Coil & Base Guards

Units w/ an Optional Pump Package: Code 42= PPZS, PPZD

AGZ 025- 190 Base Louver Components

Ref.#	Description	Part Number	Unit Sizes				
			025-070	075-100	110-130	140-180	190
P10	Bracket- Louver Mounting	331739101	1	1	1	1	1
P11	Louvered Panel- Front	331742001	1	1	1	1	1
P12	Bracket	331739301				1	1
P13	Bracket- Rear	331739401				1	1
P14	Louvered Panel	331739601				1	1
P15	Louvered Panel	331739602				1	1
P16	Top Support	331490502				4	4
P17	Rear Cover	331490604				2	2
W51	Louvered Panel 38.86 x 31.75”	330718601	2				
W51	Louvered Panel 38.86 x 31.75”	330718603		2	2		
W52	Louvered Panel 38.86 x 31.75”	330718602	2				
W52	Louvered Panel 38.86 x 31.75”	330718604		2	2		
W53	Louvered Panel 70.83 x 31.75”	331305801	1	1	1		
W53	Louvered Panel 69.87 x 30.39”	331739502				1	1
W54	Louvered Panel 40.00 x 31.75”	330707101		2	4	2	2
W55	Louvered Triangle 75.00 x 39.00”	330708101	1	1	1	1	1
W56	Louvered Panel 56.50 x 31.75”	331868401				1	1
W57	Louvered Panel 56.50 x 31.75”	330708001				2	2
W57	Louvered Panel 56.50 x 31.75”	330708002					2
W58	Louvered Panel 56.50 x 31.75”	331868501				1	1
W59	Louvered Panel 56.50 x 31.75”	331868601				1	1
W60	Louvered Panel 56.50 x 31.75”	331868701				1	1
W61	Louvered Panel 40.00 x 31.75”	330707201					1
W62	Louvered Panel 40.00 x 31.75”	330707301					1
N/S	Screw .25-20 x .50” Hex Head	046093807	Quantity as needed				

N/S = Not Shown on diagram.

Coil & Base Guards
Hail Guard / Wind Baffle

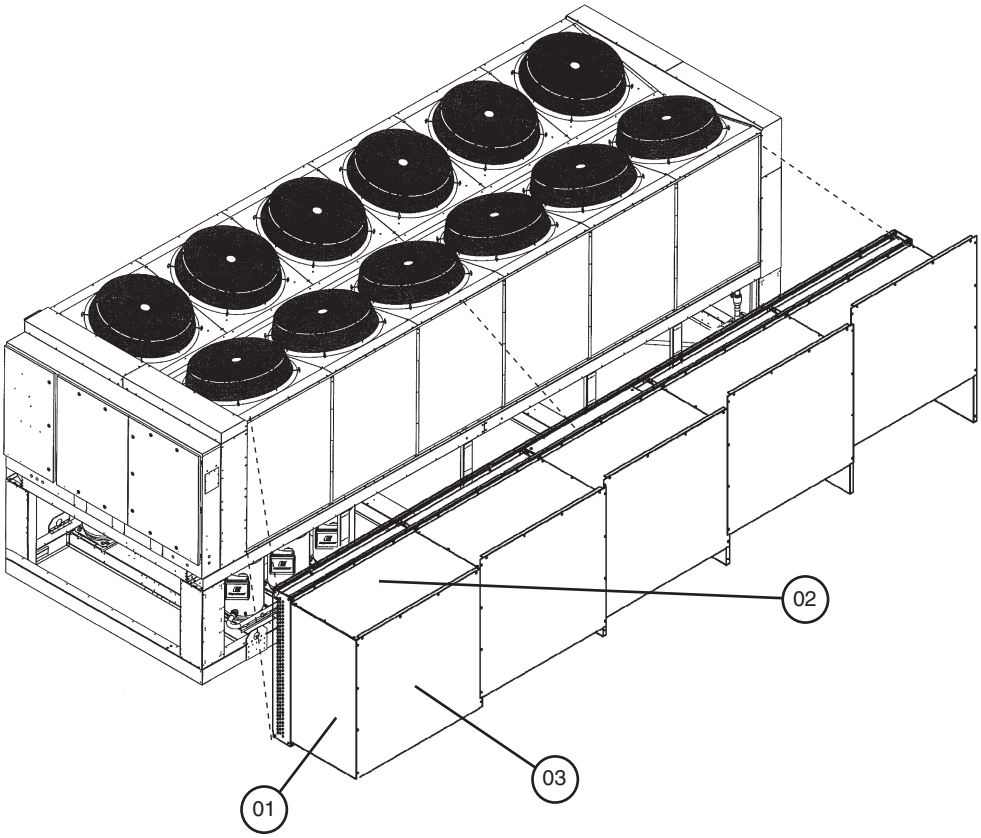

Ref.#	Description	Part Number	Unit Sizes				
			025-070	075-100	110-130	140-180	190
N/S	Hail Guard Kit [1]	330349801	1				
N/S	Hail Guard Kit [1]	330349802		1			
N/S	Hail Guard Kit [1]	330349803			1		
N/S	Hail Guard Kit [1]	330349804				1	
N/S	Hail Guard Kit [1]	330349805					1
01	Support End Panel	074758501	6	8	10	12	14
02	Top Cover	330409401	4	6	8	10	12
03	Front Panel	330409501	4	6	8	10	12
N/S	Washer	735043428	16	16	20	24	30
N/S	Screw	046093807	Quantity as needed				

N/S = Not Shown on diagram.
[1] Kits include all required parts and mounting hardware.

Optional Equipment

Alarm Bell Kit, HGBP Kit, Fan VFD Kit, Water Flow Indicator, Evaporator Strainer, and High Ambient/Exhaust Fan Kit

Alarm Bell Kit

Description	Part Number	Qty.
Alarm Bell Kit	058090104	1
Alarm Bell	017809400	1
Relay, SPDT, 30A, 120VA	072937402	1

HGBP Kit (The HGBP Kit is designed to add the hot gas bypass option to the Refrigeration Circuit when Code 24= FH.)

Description	Part Number	Qty.
HGBP Kit		
Unit Size 025-070	331776621	1
Unit Size 075-190	331776622	1

Fan VFD Kit

Description	Part Number	Qty.
Fan VFD Kit, 208V	193463603	
Fan VFD Kit, 230V	193463605	1
Fan VFD Kit, 380/460V	193463602	1
Fan VFD Kit, 575V	193463604	1

Water Flow Indicator

Description	Part Number	Qty.
Water Flow Switch- Paddle Type	017503300	1
Water Flow Switch Kit- Electronic		
Unit Size 025-055 (Unit Rev. Code 55= 00)	331776617	1
Unit Size 060-130 (Unit Rev. Code 55= 00)	331776618	1
Unit Size 140-190 (Unit Rev. Code 55= 00)	331776619	1
Unit Size 025-190 (Unit Rev. Code 55= 0A)	331776619	1
Water Flow Sensor only	331796201	1
Cable- Water Flow Sensor only (10 Meter)	330571403	1

Evaporator Strainer

Description	Part Number	Qty.
Evaporator Strainer Kit		
Unit Size 025-055	331758902	1
Unit Size 060-130	331758903	1
Unit Size 140-190	331758908	1

High Ambient/Exhaust Fan Kit [2]

Description	Part Number	Qty.
High Ambient/Exhaust Fan Kit		
Unit Size 025-100	193463701	1
Unit Size 110-130 (208/230V)	193463702	1
Unit Size 110-130 (380/400/460/575V)	193463701	1
Unit Size 140-190	193463702	1

[2] The High Ambient Kit exhausts air out of the Control Box to help maintain acceptable operating temperature during high ambient temperature conditions.

Optional Equipment

Phase Voltage Monitor, Ground Fault Protection, 115V Outlet Kit, Transformers, & Pump Package Components

Phase Voltage Monitor

Description	Part Number	Qty.
PVM - Single Point, 208-230V	193463801	1
PVM - Single Point, 380/400/460V	193463802	1
PVM - Single Point, 575V	193463805	1
PVM - Multiple Point, 208-230V	193463806	1
PVM - Multiple Point, 380/400/460V	1934638067	1
PVM - Multiple Point, 575V	193463810	1

Ground Fault Protection

Description	Part Number	Qty.
GFP - Single Point, No Pumps, 208/230V, Sizes 025-110	193463901	1
GFP - Single Point, No Pumps, 208/230V, Sizes 125-190	193463902	1
GFP - Single Point, No Pumps, 380/400/460V	193463901	1
GFP - Single Point, With Pumps, 208/230V, Sizes 025-100	193463901	1
GFP - Single Point, With Pumps, 208/230V, Sizes 110-190	193463901	1
GFP - Single Point, With Pumps, 460/575V	193463901	1
GFP - Multiple Point, 208/230/380/400/575V	193463901	1

115V Outlet Kit

Description	Part Number	Qty.
115V Outlet Kit	193463501	1

[3] Units without Pump Package: If unit has T1 Transformer less than 3KVA, a seperate 2KVA Transformer is required to provide power to the 115V Outlet.
Units with Pump Package: Replace existing 1.5 or 2KVA T1 Transformer with a 3KVA Transformer to provide power to the 115V Outlet.

Transformers

Description	2KVA	3KVA	Qty.
Transformer, 60 Hz, 208V	334704101	193463401	1
Transformer, 60 Hz, 230V	334704102	193463402	1
Transformer, 60 Hz, 380V	334704103	193463403	1
Transformer, 60 Hz, 460V	334704104	193463405	1
Transformer, 60 Hz, 575V	334704105	193463406	1
Transformer, 50 Hz, 400V	334704106	193463404	1

Pump Package Components

Pump Packages are generated per customer specifications. Contact Daikin McQuay Parts with the unit GO number and Serial Number including any available vendor information so that the correct part(s) can be identified.
For a listing of Pump Package Control Box Components see the Pump Package Control Box Section.

Pump Package Control Box
Diagrams [1]

Non-VFD Single Pump

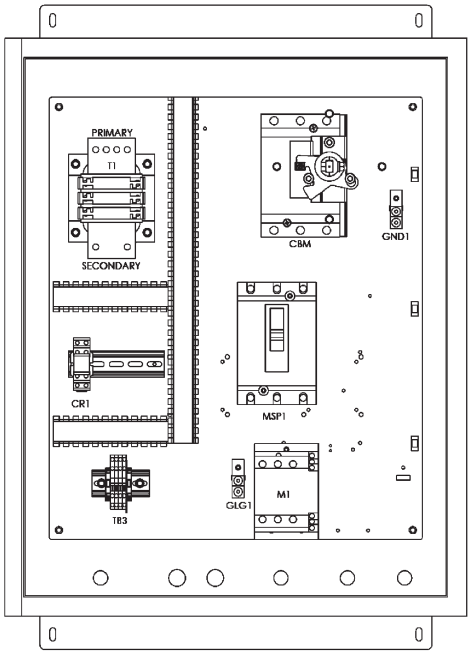

VFD w/o Line Reactor Single Pump

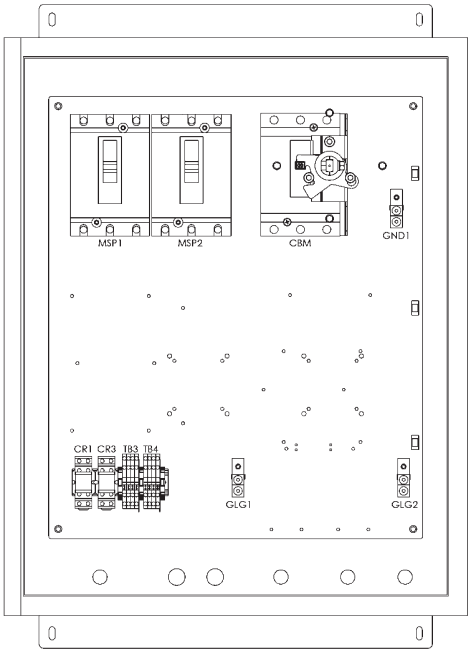

VFD w/ Line Reactor Dual Pump

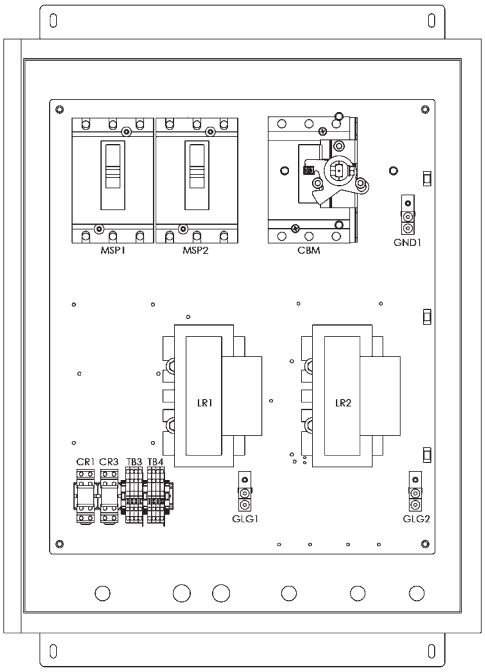

[1] The Diagrams shown above are representative of typical Pump Package Control Box layouts and are to be used for reference only. Components and component layout will vary depending upon options selected.

Pump Package Control Box

Pump Package Control Box Label Diagrams [1]

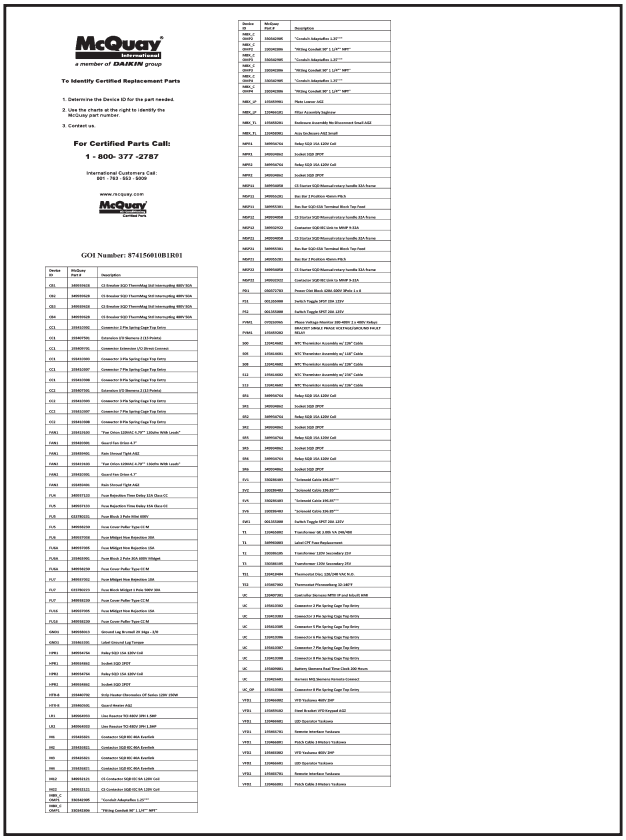

McQuay International
a member of DAIKIN group

To Identify Certified Replacement Parts

1. Determine the Device ID for the part needed.
2. Use the charts at the right to identify the McQuay part number.
3. Contact us.

For Certified Parts Call:

1 - 800- 377 -2787

International Customers Call:
001 - 763 - 552 - 5000

www.mcquay.com

McQuay Factory Authorized Certified Parts

GOI Number: 874156810B1R01

Device ID	McQuay Part #	Description
CB1	180501928	C2 Breaker 3QC1 ThermMag Std Interrupting 480V/60A
CB2	180501928	C2 Breaker 3QC1 ThermMag Std Interrupting 480V/60A
CB3	180501928	C2 Breaker 3QC1 ThermMag Std Interrupting 480V/60A
CB4	180501928	C2 Breaker 3QC1 ThermMag Std Interrupting 480V/60A
CC1	155615202	Connector 2 Pin Spring Cage Top Extra
CC2	155607206	Extension 1/0 Siemens 2 2/3 Protect
CC3	155615701	Connector Extension 1/0 Direct Connect
CC4	155615304	Connector 3 Pin Spring Cage Top Extra
CC5	155615207	Connector 7 Pin Spring Cage Top Extra
CC6	155615308	Connector 8 Pin Spring Cage Top Extra
CC7	155607206	Extension 1/0 Siemens 2 2/3 Protect
CC8	155615304	Connector 3 Pin Spring Cage Top Extra
CC9	155615207	Connector 7 Pin Spring Cage Top Extra
CC10	155615308	Connector 8 Pin Spring Cage Top Extra
FUR1	155615102	"Fan Drive 120Hz 4.7R" 12Volts With Leads"
FUR1	155615106	Guard Fan Drive 4.7"
FUR1	155609401	Rain Shroud Tight A42
FUR2	155615102	"Fan Drive 120Hz 4.7R" 12Volts With Leads"
FUR2	155615106	Guard Fan Drive 4.7"
FUR2	155609401	Rain Shroud Tight A42
FU5	140507123	Fuse Bussmann Time Delay 15A Class CC
FU6	140507123	Fuse Bussmann Time Delay 15A Class CC
FU8	152706131	Fuse Block 3 Pole 30Ae 600V
FU9	140506104	Fuse Cover Puller Type 10 M
FU9	140507202	Fuse Midget Slow Bussmann 20A
FU9A	140507206	Fuse Midget Slow Bussmann 15A
FU9A	155615301	Fuse Block 2 Pole 30A 600V Midget
FU9A	140506104	Fuse Cover Puller Type 10 M
FU7	140507202	Fuse Midget Slow Bussmann 20A
FU7	155700215	Fuse Block Midget 3 Pole 30AV 60A
FU7	140506104	Fuse Cover Puller Type 10 M
FU8A	140507206	Fuse Midget Slow Bussmann 15A
FU8A	140506104	Fuse Cover Puller Type 10 M
GND1	155615101	Ground Lug to Panel 3P Alum. 1/0
GND1	155615101	Label Ground Lug Torque
HPR1	140504704	Relay 3QU 15A 120V Coil
HPR1	155616602	Socket 3QU 2PDT
HPR2	140504704	Relay 3QU 15A 120V Coil
HPR2	155616602	Socket 3QU 2PDT
HTR-B	155660702	Strip Heater Electronics CP Series 120W 230VAC
HTR-B	155615101	Guard Heater A42
LR1	180501924	Line Reactor TO-REV 3Ph-1.8MF
LR2	180501922	Line Reactor TO-REV 3Ph-1.8MF
M6	155615201	Contactor 5QB-DC-80A Everlink
M8	155615321	Contactor 5QB-DC-80A Everlink
M9	155615201	Contactor 5QB-DC-80A Everlink
M9	155615321	Contactor 5QB-DC-80A Everlink
M6X2	140503125	C5 Contactor 5QB-DC-5A 120V Coil
M6X2	140503125	C5 Contactor 5QB-DC-5A 120V Coil
OMP1 - OMP5	150602006	"Conduit Adapter/Bu 1.25""
OMP1 - OMP5	150342006	"Fitting Conduit 90° 1 1/4"- NPT"
OMP2 - OMP6	150602006	"Conduit Adapter/Bu 1.25""
OMP2 - OMP6	150342006	"Fitting Conduit 90° 1 1/4"- NPT"
OMP3 - OMP7	150602006	"Conduit Adapter/Bu 1.25""
OMP3 - OMP7	150342006	"Fitting Conduit 90° 1 1/4"- NPT"
OMP4 - OMP8	150602006	"Conduit Adapter/Bu 1.25""
OMP4 - OMP8	150342006	"Fitting Conduit 90° 1 1/4"- NPT"
OMA_LP	155605961	Plate Lexan A42
OMA_LP	155606101	Pilot Assembly Sightlar
OMA_T1	155605301	Enclosure Assembly No Disconnect Small A42
OMA_T1	155605901	Acra Dc-Boxes A42 Small
OPR1	140504704	Relay 3QU 15A 120V Coil
OPR1	155616602	Socket 3QU 2PDT
OPR2	140504704	Relay 3QU 15A 120V Coil
OPR2	155616602	Socket 3QU 2PDT
OSP11	140505809	C5 Starter 5QB Manual Interp Handle 32A Frame
OSP11	140506101	Box Bar 2 Pfcutlass Alenco Pb-5
OSP11	140505301	Box Bar 5QD-32A Terminal Block Top Feed
OSP12	140504808	C5 Starter 5QB Manual Interp Handle 32A Frame
OSP12	140502922	Contactor 5QB-DC Line Ia SNAP 3-5A
OSP21	140504808	C5 Starter 5QB Manual Interp Handle 32A Frame
OSP21	140505301	Box Bar 5QD-32A Terminal Block Top Feed
OSP22	140506101	Box Bar 2 Pfcutlass Alenco Pb-5
OSP22	140505809	C5 Starter 5QB Manual Interp Handle 32A Frame
OSP22	140502922	Contactor 5QB-DC Line Ia SNAP 3-5A
PB1	150515701	Power Dist Block 6266-200V 3Pole 1 x 6
PS1	001201008	Switch Toggle SPST 20A 125V
PS2	001201008	Switch Toggle SPST 20A 125V
PWR1	155615906	Phase Voltage Monitor 208-480V 1 2 480V Output
PWR1	155605302	BRAUNT SINGLE PHASE VOLTAGE/SEQUENCE RELAY RELAY
S00	155614602	NTC Thermistor Assembly w/ 250" Cable
S05	155614602	NTC Thermistor Assembly w/ 110" Cable
S09	155614602	NTC Thermistor Assembly w/ 250" Cable
S12	155614602	NTC Thermistor Assembly w/ 250" Cable
S13	155614602	NTC Thermistor Assembly w/ 250" Cable
SR1	140504704	Relay 3QU 15A 120V Coil
SR1	155616602	Socket 3QU 2PDT
SR2	140504704	Relay 3QU 15A 120V Coil
SR2	155616602	Socket 3QU 2PDT
SR3	140504704	Relay 3QU 15A 120V Coil
SR3	155616602	Socket 3QU 2PDT
SR4	140504704	Relay 3QU 15A 120V Coil
SR4	155616602	Socket 3QU 2PDT
SV1	150202401	"Solenoid Cable 18A.00""
SV2	150202401	"Solenoid Cable 18A.00""
SV5	150202401	"Solenoid Cable 18A.00""
SV6	150202401	"Solenoid Cable 18A.00""
SW1	001201008	Switch Toggle SPST 20A 125V
T1	155602002	Transformer 3K 4.5Ph VA 208/480
T1	140502002	Label CPT Fuse Replacement
T2	150500105	Transformer 120V Secondary 25V
T3	150500105	Transformer 120V Secondary 25V
TS1	155612406	Thermostat Disc. 220/240 TAC R.E.
TS2	155607902	Thermostat Fitrosenbing 32-140°F
UC	155607301	Controller Dixieco MPIII Of and Adjust 8NM
UC	155615302	Connector 2 Pin Spring Cage Top Entry
UC	155615301	Connector 3 Pin Spring Cage Top Entry
UC	155615308	Connector 8 Pin Spring Cage Top Entry
UC	155615306	Connector 6 Pin Spring Cage Top Entry
UC	155615307	Connector 7 Pin Spring Cage Top Entry
UC	155615308	Connector 8 Pin Spring Cage Top Entry
UC	155609801	Battery Siemens Real Time Clock 200 Hours
UC	155615401	Harness MIS Siemens Female Connect
UC_DP	155615306	Connector 6 Pin Spring Cage Top Entry
VFD1	155660801	VFD Yaskawa 460V 2HP
VFD1	155605602	Steel Bracket VFD Keypad A42
VFD1	155660801	100 Operator Yaskawa
VFD1	155605701	Remote Interface Yaskawa
VFD1	155660801	Pitch Cable 2 Meters Yaskawa
VFD2	155602002	VFD Yaskawa 460V 2HP
VFD2	155660801	100 Operator Yaskawa
VFD2	155605701	Remote Interface Yaskawa
VFD2	155660801	Pitch Cable 2 Meters Yaskawa

Pump Package Control Box Label

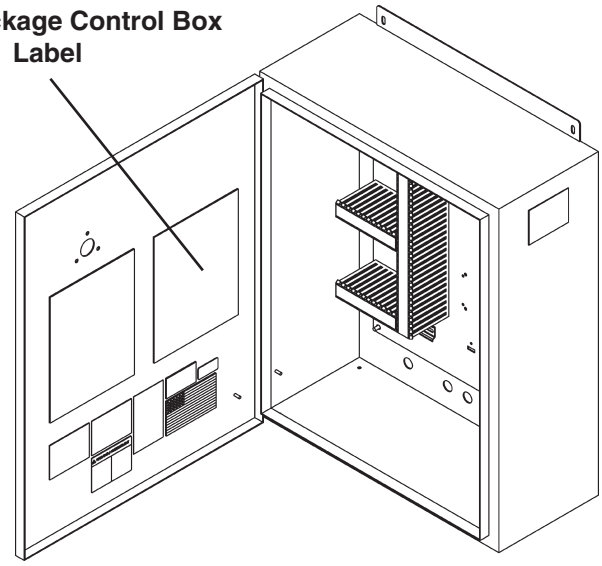

[1] Pump Package Control Boxes will have a label similar to the one shown above pasted to the inside of the Control Box door. This label contains schematic designators, part descriptions, and McQuay part numbers. The label shown above is for representative purposes only. Actual part numbers and part quantity will vary depending upon Pump Package options selected.

Pump Package Control Box
Contactors & Motor Service Protectors, 208V

1HP to 10HP

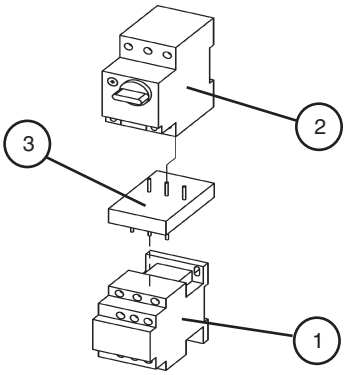

15HP to 25HP

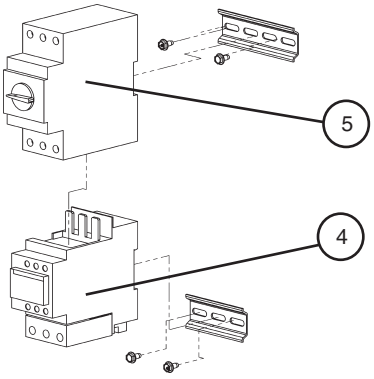

Ref. No.	Schem. Sym.	Description		Part Number	Qty.
		1HP Pump Motor			
1	M1, 2	Contactor, Pump Package	9A	349932121	[1]
2	MSP1, 2	Motor Service Protector		349934049	[1]
		1.5HP, 2HP Pump Motor			
1	M1, 2	Contactor, Pump Package	9A	349932121	[1]
2	MSP1, 2	Motor Service Protector		349934050	[1]
		3HP Pump Motor			
1	M1, 2	Contactor, Pump Package	12A	349932122	[1]
2	MSP1, 2	Motor Service Protector		349934051	[1]
		5HP Pump Motor			
1	M1, 2	Contactor, Pump Package	18A	349932123	[1]
2	MSP1, 2	Motor Service Protector		349934052	[1]
		7.5HP Pump Motor			
1	M1, 2	Contactor, Pump Package	25A	349932321	[1]
2	MSP1, 2	Motor Service Protector		349934054	[1]
		10HP Pump Motor			
1	M1, 2	Contactor, Pump Package	32A	349932322	[1]
2	MSP1, 2	Motor Service Protector		349934055	[1]
		15HP Pump Motor			
4	M1, 2	Contactor, Pump Package	50A	193426822	[1]
5	MSP1, 2	Motor Service Protector		349934148	[1]
		20HP Pump Motor			
4	M1, 2	Contactor, Pump Package	65A	193426823	[1]
5	MSP1, 2	Motor Service Protector		349934149	[1]
		25HP Pump Motor			
4	M1, 2	Contactor, Pump Package	80A	349932621	[1]
5	MSP1, 2	Motor Service Protector		349938606	[1]
3	-	Link (1HP to 10HP only)		349932922	[1]

[1] Quantity equals 1pc. for single pump packages and 2pc. for dual pump packages

Pump Package Control Box
Contactors & Motor Service Protectors, 230V

1HP to 10HP

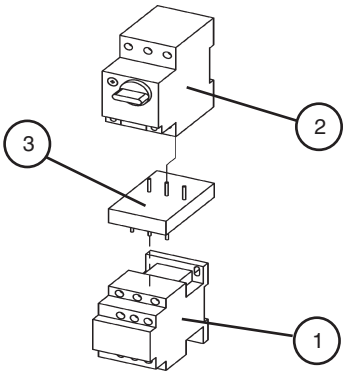

15HP to 25HP

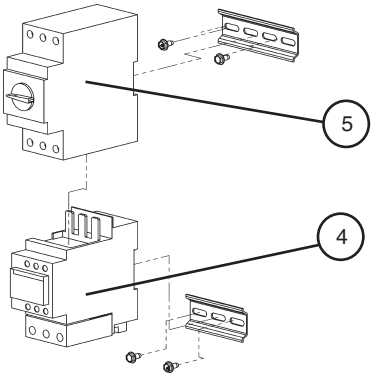

Ref. No.	Schem. Sym.	Description		Part Number	Qty.
		1HP, 1.5HP Pump Motor			
1	M1, 2	Contactor, Pump Package	9A	349932121	[1]
2	MSP1, 2	Motor Service Protector		349934049	[1]
		2HP Pump Motor			
1	M1, 2	Contactor, Pump Package	9A	349932121	[1]
2	MSP1, 2	Motor Service Protector		349934050	[1]
		3HP Pump Motor			
1	M1, 2	Contactor, Pump Package	12A	349932122	[1]
2	MSP1, 2	Motor Service Protector		349934051	[1]
		5HP Pump Motor			
1	M1, 2	Contactor, Pump Package	18A	349932123	[1]
2	MSP1, 2	Motor Service Protector		349934052	[1]
		7.5HP Pump Motor			
1	M1, 2	Contactor, Pump Package	25A	349932321	[1]
2	MSP1, 2	Motor Service Protector		349934054	[1]
		10HP Pump Motor			
1	M1, 2	Contactor, Pump Package	32A	349932322	[1]
2	MSP1, 2	Motor Service Protector		349934055	[1]
		15HP Pump Motor			
4	M1, 2	Contactor, Pump Package	50A	193426822	[1]
5	MSP1, 2	Motor Service Protector		349934148	[1]
		20HP Pump Motor			
4	M1, 2	Contactor, Pump Package	65A	193426823	[1]
5	MSP1, 2	Motor Service Protector		349934149	[1]
		25HP Pump Motor			
4	M1, 2	Contactor, Pump Package	80A	349932621	[1]
5	MSP1, 2	Motor Service Protector		349938606	[1]
3	-	Link (1HP to 10HP only)		349932922	[1]

[1] Quantity equals 1pc. for single pump packages and 2pc. for dual pump packages

Pump Package Control Box
Contactors & Motor Service Protectors, 460V

1HP to 20HP

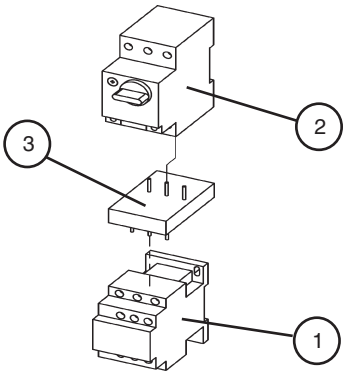

25HP only

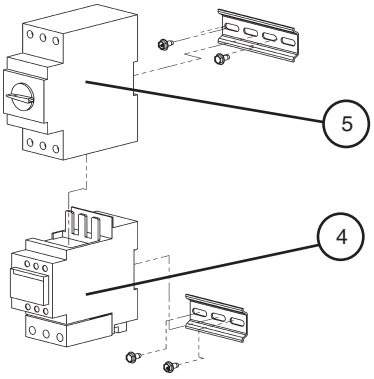

Ref. No.	Schem. Sym.	Description		Part Number	Qty.
		1HP Pump Motor			
1	M1, 2	Contactor, Pump Package	9A	349932121	[1]
2	MSP1, 2	Motor Service Protector		349934047	[1]
		1.5HP, 2HP Pump Motor			
1	M1, 2	Contactor, Pump Package	9A	349932121	[1]
2	MSP1, 2	Motor Service Protector		349934048	[1]
		3HP Pump Motor			
1	M1, 2	Contactor, Pump Package	9A	349932121	[1]
2	MSP1, 2	Motor Service Protector		349934049	[1]
		5HP Pump Motor			
1	M1, 2	Contactor, Pump Package	9A	349932121	[1]
2	MSP1, 2	Motor Service Protector		349934050	[1]
		7.5HP Pump Motor			
1	M1, 2	Contactor, Pump Package	12A	349932122	[1]
2	MSP1, 2	Motor Service Protector		349934051	[1]
		10HP Pump Motor			
1	M1, 2	Contactor, Pump Package	18A	349932123	[1]
2	MSP1, 2	Motor Service Protector		349934051	[1]
		15HP Pump Motor			
1	M1, 2	Contactor, Pump Package	25A	349932321	[1]
2	MSP1, 2	Motor Service Protector		349934054	[1]
		20HP Pump Motor			
1	M1, 2	Contactor, Pump Package	32A	349932322	[1]
2	MSP1, 2	Motor Service Protector		349934055	[1]
		25HP Pump Motor			
4	M1, 2	Contactor, Pump Package	65A	193426821	[1]
5	MSP1, 2	Motor Service Protector		349934147	[1]
3	-	Link (1HP to 20HP only)		349932922	[1]

[1] Quantity equals 1pc. for single pump packages and 2pc. for dual pump packages

Pump Package Control Box
Contactors & Motor Service Protectors, 575V

1HP to 25HP

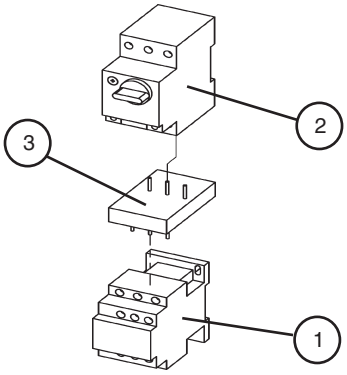

Ref. No.	Schem. Sym.	Description		Part Number	Qty.
		1HP, 1.5HP Pump Motor			
1	M1, 2	Contactor, Pump Package	9A	349932121	[1]
2	MSP1, 2	Motor Service Protector		349934047	[1]
		2HP, 3HP Pump Motor			
1	M1, 2	Contactor, Pump Package	9A	349932121	[1]
2	MSP1, 2	Motor Service Protector		349934048	[1]
		5HP Pump Motor			
1	M1, 2	Contactor, Pump Package	9A	349932121	[1]
2	MSP1, 2	Motor Service Protector		349934049	[1]
		7.5HP Pump Motor			
1	M1, 2	Contactor, Pump Package	12A	349932122	[1]
2	MSP1, 2	Motor Service Protector		349934050	[1]
		10HP Pump Motor			
1	M1, 2	Contactor, Pump Package	12A	349932122	[1]
2	MSP1, 2	Motor Service Protector		349934051	[1]
		15HP Pump Motor			
4	M1, 2	Contactor, Pump Package	18A	349932123	[1]
5	MSP1, 2	Motor Service Protector		349934052	[1]
		20HP Pump Motor			
4	M1, 2	Contactor, Pump Package	25A	349932321	[1]
5	MSP1, 2	Motor Service Protector		349934054	[1]
		25HP Pump Motor			
4	M1, 2	Contactor, Pump Package	32A	349932322	[1]
5	MSP1, 2	Motor Service Protector		349934055	[1]
3	-	Link		349932922	[1]

[1] Quantity equals 1pc. for single pump packages and 2pc. for dual pump packages

Pump Package Control Box

T1 Transformer, Fuses FU4, FU5, & FU6, Terminal Block TB1, CR1 Relay & Ground Lug GLG1

Schem. Sym.	Description		208/60/3	230/60/3	400-460/60/3	575/60/3
T1	Transformer	500VA	038253972	038253954	038253954	038253981
	Finger Safe Kit		349955901	349955901	349955901	349955901
	Fuse Puller Kit		349955801	349955801	349955801	349955801
CR1	Relay	15A	349934764	349934764	349934764	349934764
	Socket, Relay 2PDT		349934862	349934862	349934862	349934862
FU4	Fuse, Time Delay	6A	300041289	300041289		
	Fuse, Time Delay	4A			049759810	
	Fuse, Time Delay	3A				049759809
FU5	Fuse, Time Delay	6A	300041289	300041289		
	Fuse, Time Delay	4A			049759810	
	Fuse, Time Delay	3A				049759809
FU6	Fuse, Midget	6.25A	4EHG8910	4EHG8910	4EHG8910	4EHG8910
TB1	Terminal Block 2x2 Spring		349930641	1	349930641	349930641
	Terminal Block End Plate		349930741	1	349930741	349930741
	Terminal Block End Stop		349930841	1	349930841	349930841
GLG1	Ground Lug		349938011	1	349938011	349938011

Pump Package Control Box
Disconnect Switches

Disconnect Switches

Schem. Sym.	Description	Qty.	Voltage/ Pump HP	Part Number	SCCR Rating [1]	No. of Pumps
CBM	Disconnect Switch 100A	1	ALL	349935125 [2]	Std.	1
	Lug	1	ALL	349926501	Std.	1
	Handle Kit	1	ALL	349935521	Std.	1
	Disconnect Switch 100A	1	ALL	349935125 [2]	Std.	2
	Distribution Lug	1	ALL	193502501	Std.	2
	Handle Kit	1	ALL	349935521	Std.	2
	Disconnect Switch 150A	1	ALL	349935126	Std.	1
	Lug	1	ALL	349926502	Std.	1
	Handle Kit	1	ALL	349935521	Std.	1
	Disconnect Switch 150A	1	ALL	349935126	Std.	2
	Distribution Lug	1	ALL	349956202	Std.	2
	Lug Shield	1	ALL	349957001	Std.	2
	Handle Kit	1	ALL	349935521	Std.	2
	Disconnect Switch 150A	1	ALL	349935126	High	1
	Lug	1	ALL	349926502	High	1
	Handle Kit	1	ALL	349935521	High	1
	Disconnect Switch 150A	1	ALL	349935126	High	2
	Distribution Lug	1	ALL	349956202	High	2
	Lug Shield	1	ALL	349957001	High	2
	Handle Kit	1	ALL	349935521	High	2

[1] Standard SCCR rating Code 18= PC or DC. Hiigh SCCR rating Code 18= DH.

[2] 100A Disconnect Switches are NORMALLY offered on standard SCCR units. 150A disconnects may be offered as an option. Confirm the amperage of the Switch before ordering or contact Daikin McQuay Parts with model and serial number information so that the correct part(s) can be identified.

Pump Package Control Box
Inverters (VFDs)

Part Number	Pump Motor Horsepower																													
	1			1.5			2			3			5			7.5			10			15			20			25		
	208/230V	460V	575V	208/230V	460V	575V	208/230V	460V	575V	208/230V	460V	575V	208/230V	460V	575V	208/230V	460V	575V	208/230V	460V	575V	208/230V	460V	575V	208/230V	460V	575V	208/230V	460V	575V
193475804 [1]	1																													
193475821 [1]		1																												
193456301 [2, 3]			1																											
193475806 [1]				1																										
193475822 [1]					1																									
193456302 [2, 3]						1																								
193475806 [1]							1																							
193475822 [1]								1																						
193456302 [2, 3]									1																					
193475807 [1]										1																				
193475823 [1]											1																			
193456303 [2, 3]												1																		
193475809 [1]													1																	
193475825 [1]														1																
193456304 [2, 3]															1															
193475810 [1]																1														
193475826 [1]																	1													
193456305 [2, 3]																		1												
193475811 [1]																			1											
193475827 [1]																				1										
193456306 [2, 3]																					1									
193475812 [1]																						1								
193475828 [1]																							1							
193456307 [2, 3]																								1						
193475813 [1]																									1					
193475829 [1]																										1				
193456308 [2, 3]																											1			
193475814 [1]																												1		
193475830 [1]																													1	
349956647 [4]																														1

[1] The Inverter Remote Keypad is p/n 349958805 and the Remote Keypad Mounting kit is p/n 349958803. The Lonworks Cmmunication Card is p/n 193482601. All other Communication Cards are integral to the VFD and are not available separately.

[2] MD3 Remote Keypad p/n is 349958802.

[3] For 575V units with an MD3 Inverter and motor 20 HP or smaller a Line Reactor will be automatically installed. See the table on the following page for Line Reactor part numbers.

[4] MD6 Remote Keypad p/n is 349958805 plus Mount p/n 349958803.

Pump Package Control Box
Line Reactors

Part Number	Motor Horsepower																													
	1			1.5			2			3			5			7.5			10			15			20			25		
	208/230V	460V	575V	208/230V	460V	575V	208/230V	460V	575V	208/230V	460V	575V	208/230V	460V	575V	208/230V	460V	575V	208/230V	460V	575V	208/230V	460V	575V	208/230V	460V	575V	208/230V	460V	575V
349964915	1																													
349964950			1																											
349964941				1																										
349964901					1																									
349964951						1																								
349964916							1																							
300046366								1																						
349964951									1																					
300042155										1																				
300042156											1																			
349964953												1																		
349964918													1																	
330592201														1																
349964929															1															
349964919																1														
349964904																	1													
349964932																		1												
349964920																			1											
349964905																				1										
349964927																					1									
349964911																						1								
349964906																							1							
349964930																								1						
349964934																										1				
349964931																											1			
349964907																													1	
349964926																														1

Critical Daikin Applied OEM Parts Are What Your Daikin Applied HVAC Unit Needs!

CRITICAL COMPONENTS	UNIT SIZE	VOLTAGE	PART NUMBER
FILTER DRIER			
Filter Drier- Core	ALL	ALL	070339101
Filter Drier- Gasket Kit	ALL	ALL	074783601
CONTROL COMPONENTS			
Transducer- Suction	ALL	ALL	331764511
Transducer- Discharge	ALL	ALL	331764611
Sensor- Temperature	ALL	ALL	193414602
Switch- High Pressure (Unit Rev. 00)	ALL	ALL	331542401
Switch- High Pressure (Unit Rev. 0A)	ALL	ALL	331542402
EXPANSION VALVES			
Thermal Expansion Valve	025-040	ALL	331761511
Thermal Expansion Valve	045-055	ALL	331761512
Thermal Expansion Valve	060-070	ALL	331761513
Thermal Expansion Valve	075-125	ALL	331761514
Thermal Expansion Valve	130	ALL	331761515
Electronic Expansion Valve	050-055	ALL	332870801
Electronic Expansion Valve	060-070	ALL	332870802
Electronic Expansion Valve	075-100	ALL	332870803
Electronic Expansion Valve	110-130	ALL	332870804
Electronic Expansion Valve	140-190	ALL	332870805
COND. FAN COMPONENTS			
Motor, 1.5 HP	025-060	208-460/60/3	330423402
Fan Blade- 30” for 1.5 HP Motor	025-060	208-460/60/3	330423901
Motor, 2.0 HP	065-190	208/230/60/3	330423302
Motor, 2.0 HP	065-190	400/50/3 OR 460/60/3	330293902
Motor, 2.0 HP	ALL	575/60/3	330423702
Fan Blade- 30” for 2.0 HP Motor	ALL	ALL	330294001
COMPRESSORS			
Please see Replacement Parts List 7000186 pages 20-32.			

Call Your Local Daikin Applied Parts Distributor For All Your Parts Needs.
To Locate A Distributor, Go To www.DaikinApplied.com or Call 1-800-37PARTS